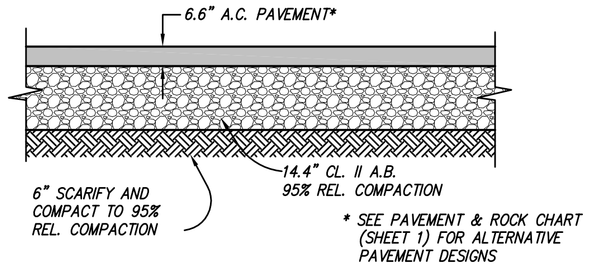

ASPHALT PAVEMENT SECTION (1)

N.T.S.

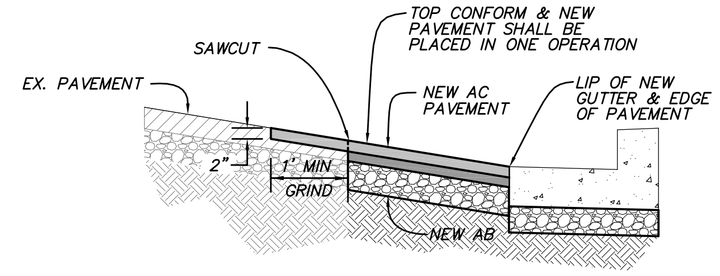

TYPICAL GRIND DETAIL (2)

N.T.S.

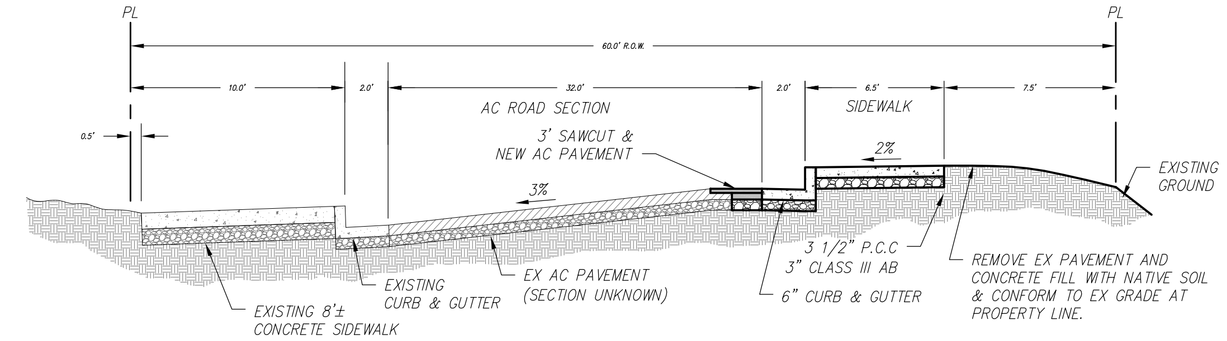

TYPICAL STREET CROSS-SECTION A-A (3)

N.T.S.

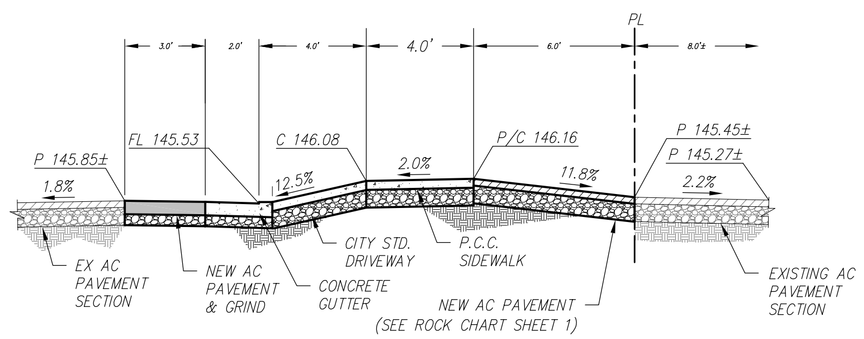

DRIVEWAY SECTION B-B (4)

1"=4'-0"

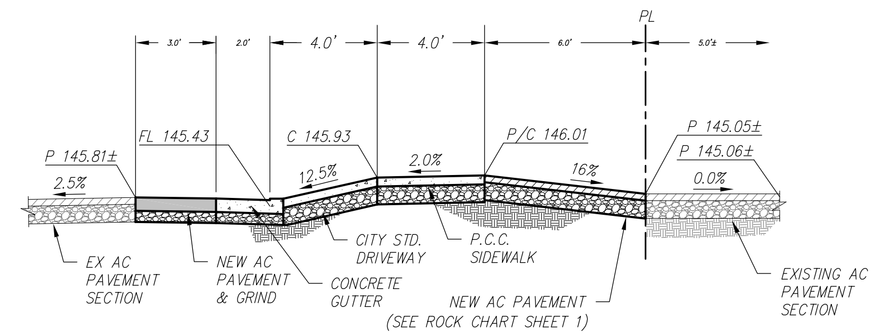

DRIVEWAY SECTION C-C (5)

1"=4'-0"

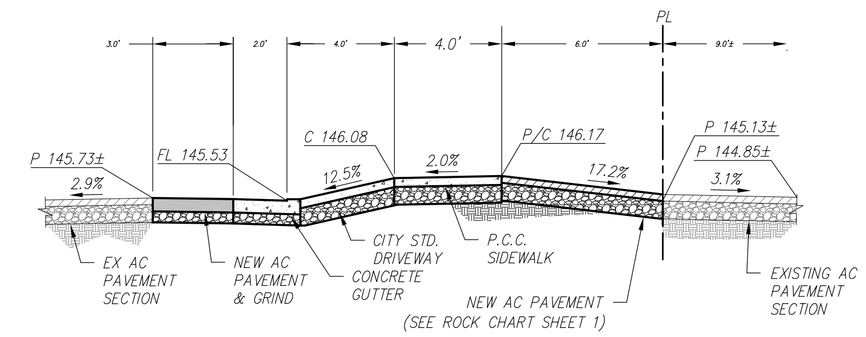

DRIVEWAY SECTION D-D (6)

1"=4'-0"

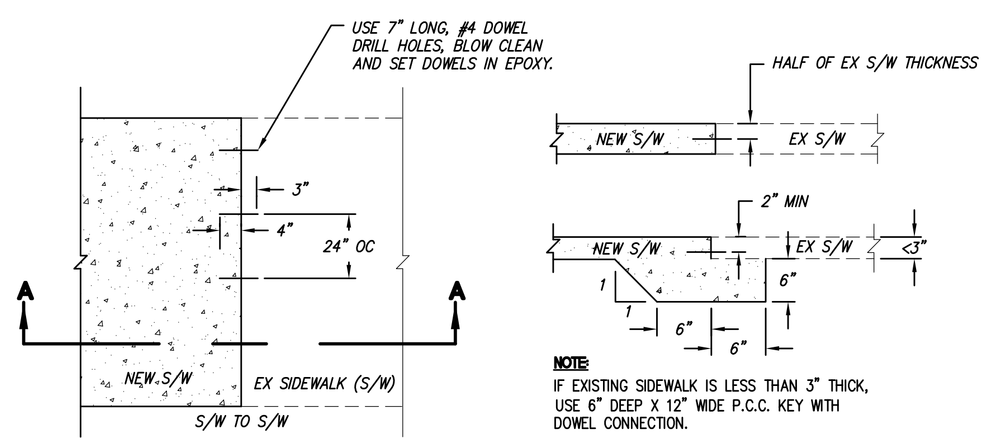

NOTE:
IF EXISTING SIDEWALK IS LESS THAN 3" THICK, USE 6" DEEP X 12" WIDE P.C.C. KEY WITH DOWEL CONNECTION.

PLAN VIEW
NO SCALE

SECTION A-A
NO SCALE

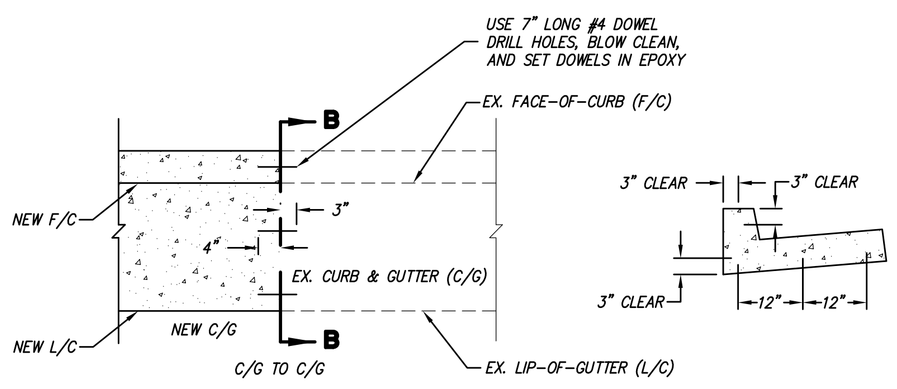

PLAN VIEW
NO SCALE

SECTION B-B
NO SCALE

DOWEL DETAIL (TYPICAL) (7)

NO SCALE

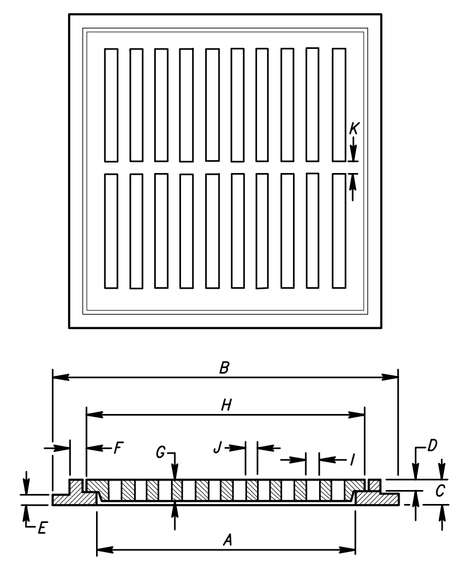

FRAME & GRATE TYPE	A	B	C	D	E	F	G	H	I	J	K	NO. OF RIBS	FLOW AREA
REGULAR FLAT GRATE INLET	24"	30"	2"	1"	1"	3/4"	2"	26"	1"	1"	1 1/4"	10	223 SQ.IN.

GRATE & FRAME

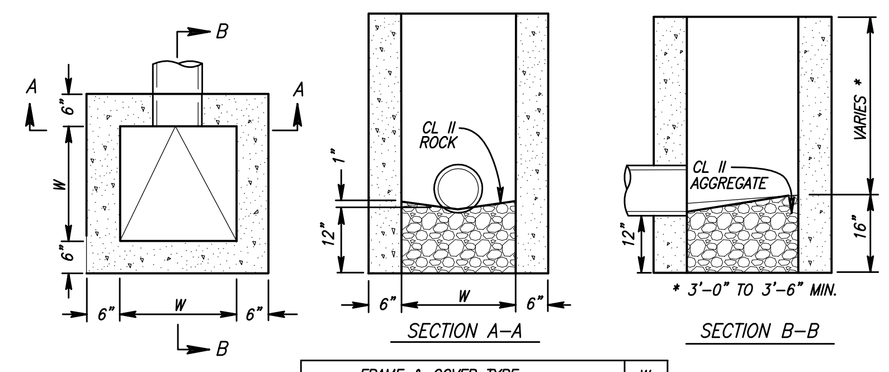

SECTION A-A

SECTION B-B

FRAME & COVER TYPE	W
REGULAR FLAT GRATE AND HOODED INLETS	24"

CONCRETE BOX

FLAT GRATE OPEN BOTTOM INLET (8)

NO SCALE

SANDIS CIVIL ENGINEERS SURVEYORS PLANNERS
www.sandis.net
605 Castro Street | Mountain View, CA 94041 | P. 650.969.6900 | F. 650.969.6472
MOUNTAIN VIEW ROSEVILLE OAKLAND

Date:	SEPT 4, 2009
Scale:	AS NOTED
Designed:	CG
Drawn:	SKG
Checked:	CB
Proj. Engr:	CB
File:	208153

REVISIONS	DESIGN BY	DESIGN DATE	CITY APPR.	APPR. DATE

PLAN
FOR THE INTERIM IMPROVEMENT OF
ABORN ROAD
DETAILS AND SECTIONS
SAN JOSE CALIFORNIA

PERMIT # 09-010343
PROJECT # 3-06489
PROJECT INSPECTOR: JIM HARTMAN
VOICE MAIL: (408) 221-4612

PROJECT ENGINEER — NAME — DATE
DEPTARTMENT OF TRANSPORTATION — NAME — DATE
MUNICIPAL WATER — N.A. — TIM TOWN — DATE
ADDITIONAL APPROVAL — N.A. — NAME — DATE
STREETLIGHT LAYOUT — N.A. — NAME — DATE
ELECTRICAL CIRCUITS — N.A. — GUIXIANG CHEN – ELECTRICAL ENGINEER — DATE

DEPARTMENT OF PUBLIC WORKS
SAN JOSE, CALIFORNIA
CITY OF SAN JOSE
CAPITOL OF SILICON VALLEY
APPROVED BY KATY ALLEN
DIRECTOR OF PUBLIC WORKS
N.A.

File: X:\P\208153\ENG\CONTRACT\4.0_DETL.dwg Date: Oct 02, 2009 – 11:43am, sgibbons