August 29, 2008

ADDENDUM NO. 2
FOR THE
WILLOWS SENIOR CENTER FIRE DAMAGE REPAIR

Notice is hereby given that the following revisions, clarification, additions and/or deletions are hereby made of, and incorporated into plans and specifications for the **WILLOWS SENIOR CENTER FIRE DAMAGE REPAIR.**

RESPONSES TO QUESTIONS FROM PRE-BID MEETING:

Question #1:
Spec. Model # for lateral file and safe in Office 102. Are they provided by Owner & is contractor install?
Answer #1:
The lateral file and safe in Office 102 shall be Owner furnished and Owner installed.

Question #2:
For add alternate #1, what is the existing epoxy floor thickness, and how thick do you want the new epoxy?
Answer #2:
The existing epoxy floor thickness shall be field verified by Contractor. The new epoxy flooring shall be ¼" thick as detailed in specification section 09705 Alternate 1

Question #3:
Drawing A-2: Note 10 states to remove only the damaged wall insulation. Note 8 on page A-3 calls for new insulation. Will all the existing ceiling and wall insulation be removed and replaced or only damaged insulation?
Answer #3:
Note 10 is deleted. See drawing clarifications #1 below.

Question #4:
Has there been any survey as to any asbestos or other hazardous materials?
Answer #4:
Asbestos-None Detected. See attached survey reports from Benchmark Environmental Engineering dated July 26, 2007 and August 13, 2007.

200 E. Santa Clara St., 6th Floor, San José, CA 95113 *tel* (408) 535-8350 *fax* (408) 292-6288 www.sanjoseca.gov

Question #5:
Drawing A-3: Kitchen schedule shows a quantity of one for E-16, however the drawings show two?
Answer #5:
Schedule updated to show two quantity of E-16.

Question #6:
E-1 appears to be too large to go through the existing doors. This will be a maintenance issue please increase the size of one door or order a smaller oven?
Answer #6:
Change door 110 opening width. See drawing clarifications #2 below.

Question #7:
Drawing A-2: Door 101A is an exit door that swings inside the building. This does not meet ADA requirements as drawn. There needs to be an eighteen inch minimum on the pull side to meet the code.
Answer #7:
Change drawing to reverse door swing. See drawing clarification #2 below.

Question #8:
Room 105 on column line 1 between c & D has an unidentified line that appears to possibly be a shelf. Please clarify?
Answer #8:
Revised drawing indicates shelf location. See drawing clarifications #2 below.

Question #9:
Drawing A-4: Room 110, 112, 102 and 105 show existing ceiling to be 8 foot high, the current framing is approximately 8 foot 10 inches?
Answer #9:
Revised drawings indicate Room 110, 112, 102 & 105 ceiling height to be ±8 feet 10 inches, to be verified on field. See drawing clarification #3 below.

Question #10:
Room 109 calls for a new 8 foot ceiling. This does not match the existing conditions?
Answer #10:
New ceiling at Room109 shall be 8 feet high.

Question #11:
Drawing A-4: The support hanger for the southeast light fixture in room 109 conflicts with the duct work as drawn on M-2.
Answer #11:
Trapaze provided below duct work for support of lighting fixtures.

200 E. Santa Clara St., 6th Floor, San José, CA 95113 *tel* (408) 535-8350 *fax* (408) 292-6288 www.sanjoseca.gov

Question #12:
Drawing A-7: The interior door schedule references head and jamb detail 1/A-11. This detail does not exist. See detail 7/A-8. Please provide dimensions for jambs and trim?
Answer #12:
Revise head detail. See drawing clarifications #4 & #5 below.

Question #13:
Drawing A-7: Finish note 3 references new VCT throughout area of work. This does not match the finish schedule.
Answer #13:
Delete note 3. See drawing clarification #4 below.

Question #14:
On the window schedule, please provide sill, head and details for room 102. Also show Plaster and flashing detail for the waterproofing.
Answer #14:
Add window head and sill detail. See drawing clarification #4 below.

Question #15:
Equipment ID #E-8 is a drop-in dish dispenser, plans show this located on the floor. Is this correct?
Answer #15:
Yes. E-8 is a floor model dish dispenser as indicated in the equipment legend on A-3.

Question #16:
Specification for epoxy flooring list three sections:
Section 09670 Epoxy flooring gives requirements with no specific manufacturer, section 09705 Epoxy flooring (patch existing flooring), and section 09705Epoxy flooring alternate-1. It's understood that the later is the alternate bid. Section 09705 calls for Stoneclad UT(a Urethane finish) and the finish schedule calls out a Stonecald GS (an epoxy mortar system). Which is correct?
I assume this is the base bid and we are only patching areas of need of repair. Please clarify? Where does section 09670 apply?
Answer #16:
Delete specification section 09670.
The base bid is for patching areas that need to be repaired and two coats of chemical resistant, bisphenol F epoxy coating over entire epoxy floor to provide a uniform monolithic finish throughout. Section 09705 – Alternate 1 shall be an alternate bid.

Question #17:
Are there 2 gas solenoids?
Answer #17:
Only one is required.

200 E. Santa Clara St., 6th Floor, San José, CA 95113 *tel* (408) 535-8350 *fax* (408) 292-6288 www.sanjoseca.gov

Question #18:
Who supplies the solenoids?
Answer #18:
Furnished with range hood fire protection system.

Question #19:
Is the disposal commercial grade? What is the spec?
Answer #19:
Yes. See E-19 in equipment legend on sheet A-3 for spec.

Question #20:
Is there a re-circ. system for the hot water?
Answer #20:
No.

Question #21:
Specification 07213 2.2B
Sound batt insulation calls for acoustical glass fiber insulation meeting a flame & smoke of 10 sound batt is 25 & 50. Thermo fiber meets the 10 rating but at twice the cost. Please clarify which product is to be used.
Answer #21:
Note 8 on sheet A-3 is updated. See drawing clarification #2 below.

Question #22:
Spec section 09705 is a epoxy floor HT-4 or equal
Spec section 09705 is a urethane flooring system UT or equal
can either type of floor system be used for the alternate.
Answer #22:
Refer to answer #15 above.

Question #23:
Dwg M-2: Mechanical drawings show new louvers and duct work penetrating exterior and interior walls. There are no structural details shown for these openings. Will this be a framed opening or will new headers and trimmers be required?
Answer #23:
Response: See Details 5 and 6, Sht. A-8.

Question #24:
Dwg M-2: Note 7 calls for a grill at 8'-4". This will conflict with the ceiling.
Answer #24:
Revised elevation to 8'-6". See MAD-2.1

200 E. Santa Clara St., 6th Floor, San José, CA 95113 *tel* (408) 535-8350 *fax* (408) 292-6288 www.sanjoseca.gov

Question #25:
Dwg M-2: MAU 1 and the dishwasher exhaust conflict at line 2 due to the fact that the existing ceiling is 10 inches higher than shown not enough vertical room in the attic for the ductwork as drawn. Dishwasher exhaust over the Mau duct is large than the existing space.
Answer #25:
Equipment and ductwork layout have been revised. See MAD-2.2 & MAD-2.4.

Question #26:
Dwg M-2: Note 5 bottom of louver conflicts with existing ceiling at 8' 3". There is not enough room to raise as it will conflict with the exterior gable. And if moved to the left it will conflict with the existing flue.
Answer #26:
Louver size revised to 24x14, bottom of louver revised to 9'-6". See MAD-2.1

Question #27:
Dwg M-2: Please confirm detail 3 is correct as drawn. I believe this needs a 3 inch airspace and sheetrock or 3M fire-rated assembly. There are no structural details for framing this opening.
Answer #27:
See added Note #21. See MAD-2.1 & MAD -2.3. It is existing condition; we do not have existing structural drawings. Condition to be field verified after exiting hood is removed.

Question #28:
Dwg M-3: Please provide waterproof details for combustion air on detail 7. Will this have a surface mounted flange or will plaster be removed with J metal and caulking details.
Answer #28:
See revised Detail 7/M-3 on MAD-2.5

Question #29:
Dwg P-1: Fixture schedule calls for S.SK service sink. Cannot find this on the drawing.
Answer #29:
Not required, existing sink to stay.

Question #30:
Dwg E-1: Note 7 Arc flash study
Answer #30:
The Arc flash study shall be based on the electrical protective equipment to be provided in the project. The study consists of Short circuit study (in general covered in the full design project), system coordination study, then the Arc flash study, The last two items are depend on the subcontractor submitted equipment, therefore they are included in the sub-contractor scope of work.

200 E. Santa Clara St., 6th Floor, San José, CA 95113 *tel* (408) 535-8350 *fax* (408) 292-6288 www.sanjoseca.gov

Question #31:
Dwg E-3: Fixture A not fit between existing framing. No standard framing details are on the drawing
Answer #31:
Change to 1'x 4' fixture.

Question #32:
Dwg E-4: Note 8 calls for independent testing of the cat 5 cables; will this be required as it is only 2 pairs?
Answer #32:
Yes, independent test is required to ensure the quality of cables and installation.

Question #33:
Dwg E-5: Detail 5 shows 2 - 14awg wire in .5"c to FACP. Who is responsible for terminate in and programming.
Answer #33:
Termination and Programming by the City.

DRAWINGS:

NOTE: All revisions to the drawing are clouded and indicated as delta 1.

1. **Clarification** on sheet A-2 below:
    - **Revise** Note 8 – "DEMOLITION TO INCLUDE REMOVAL OF ALL FIXTURES, WALL INSULATION, EQUIPMENT, WALL, CEILING AND FLOOR FINISHES, GYP. BD. & MISC. ITEMS THROUGHOUT THE AREA OF WORK."
    - **Delete** Note 10
    - **Add** new demolition scope to include removal of existing fire hose cabinet and wall demo at Hall 101. See attached drawing **AD-2.1**
    - **Add** new demolition scope at Food Storage 110 to include bigger openings. See attached drawing **AD-2.2**

2. **Clarification** on sheet A-3 below:
    - **Change** door swing of exit door 101A. See attached drawing **AD-2.3**
    - **Add** note to indicate plastic laminate adjustable shelves in Janitors' 105. See attached drawing **AD-2.3**
    - **Change** door 110 to 3 feet 6 inch door and clear opening from Food storage 110 to Wash Area 109 to be 34 inches. See attached drawing **AD-2.4**
    - **Revise** Note 8 – "PROVIDE ACOUSTICAL INSULATION AT ALL NEW AND EXISTING INTERIOR AND EXTERIOR WALLS IN THE AREA OF WORK."

200 E. Santa Clara St., 6th Floor, San José, CA 95113 *tel* (408) 535-8350 *fax* (408) 292-6288 www.sanjoseca.gov

3. **Clarification** on sheet A-4 below:
   - **Change** new ceiling heights to match existing in room 102 & 105. See attached drawing **AD-2.5**
   - **Change** new ceiling heights to match existing in rooms 110 & 112. See attached drawing **AD-2.6**
   - **Change** light at Hall 112 to 1x4. See attached drawing **AD-2.6**
   - **Change** location of mechanical access panel. See attached drawing **AD-2.6**

4. **Clarification** on sheet A-7 below:
   - **Change** door schedule to indicate hollow metal frame for new doors. See attached drawing **AD-2.7**
   - **Change** Food Storage 110 door to 3 feet 6 inches. See attached drawing **AD-2.7**
   - **Change** head & jamb detail in interior door schedule to indicate "7/A-8". See attached drawing **AD-2.7**
   - **Change** wall base at Food Storage 110 to cove base in finish schedule. See attached drawing **AD-2.7**
   - **Revise** finish notes. See attached drawing **AD-2.7**
   - **Add** window head detail. See attached drawing **AD-2.8**
   - **Add** window sill detail. See attached drawing **AD-2.9**

5. **Clarification** on sheet A-9 below:
   - **Change** door head detail to show hollow metal frame. See attached drawing **AD-2.10**

6. **Clarification** on sheet M-2 below. (See attached **MAD-2.1**)
   - **Revise** notes: 4, 5, 6, 7 and 13.
   - **Add** notes: 19, 20 and 21.

7. **Clarification** on sheet M-2 below. (See attached **MAD-2.2**)
   - **Revise** location and layout for **MAD-1** and **EF-2.**

8. **Clarification** on sheet M-2 below. (See attached **MAD-2.3**)
   - **Add** note 21 to exhaust duct for hood **H-1.**

9. **Clarification** on sheet M-3. (See attached **MAD-2.4**)
   - **Revise** Section #1.

10. **Clarification** on sheet M-3. (See **MAD-2.5**)
    - **Add** note to Detail #7.

11. **Clarification** on sheet M-3. (See **MAD-2.6**)
    - **Revise** Detail #9.

200 E. Santa Clara St., 6th Floor, San José, CA 95113 *tel* (408) 535-8350 *fax* (408) 292-6288 www.sanjoseca.gov

12. **Clarification** on sheet E-3. (See attached **EAD-3.1**)
    - **Revise** Type "A" fixture's dimensions in Fixture Schedule.

13. **Clarification** on sheet E-3. (See attached **EAD-3.2**)
    - **Revise** type "A" fixture's dimension in lighting plan.
    - **Add** note for one type "C" fixture in wash area 109.

14. **Clarification** on sheet E-4. (See attached **EAD-4.1**)
    - **Add** combination starter with note 6 for MAU-1 in room 110 on 2/E4 plan.
    - **Delete** manual start/stop station for make-up unit in kitchen near col B/1.5.
    - **Add** note 14 for EF-3 and EF-2 manual starters.

15. **Clarification** on sheet E-4. (See attached **EAD-4.2**)
    - **Revise** notes 3, 4, 6 & 7.
    - **Add** note 14.

16. **Clarification** on sheet E-4. (See attached **EAD-4.3**)
    - **Relocate** a receptacle on roof.
    - **Replace** combination starter by disconnect switch for EF-1 on roof plan and revise related notes.

SPECIFICATIONS:

1. **Remove** Specification section 09670.
2. **Revise** Specification section 09705 as follows:
    - **Add sub-section C to existing Section Summary 1.01**
      C. Provide 2 component of chemical resistant, bisphenol F epoxy coating over entire epoxy floor to provide a uniform monolithic finish throughout.
    - **Add Section B to existing section Colors 2.01**
      B. Texture: Fine grain for slip resistance.

ATTACHMENTS:

1. Asbestos Report dated July 26, 2007.
2. Asbestos Report dated August 13, 2007.

END OF BID PACKAGE MODIFICATIONS

200 E. Santa Clara St., 6th Floor, San José, CA 95113 *tel* (408) 535-8350 *fax* (408) 292-6288 www.sanjoseca.gov

INSTRUCTIONS TO BIDDER:

The bidder must sign this addendum in the space provided below and return one signed copy of this sheet with the bid. **Failure to return this signed copy with the bid documents shall not relieve the bidder of the obligation to include this addendum with the bid proposal.**

APPROVED BY:

for KATHERINE JENSEN
Division Manager

Bidder's Name	Date
Signature & Title of Bidder	

200 E. Santa Clara St., 6th Floor, San José, CA 95113 *tel* (408) 535-8350 *fax* (408) 292-6288 www.sanjoseca.gov

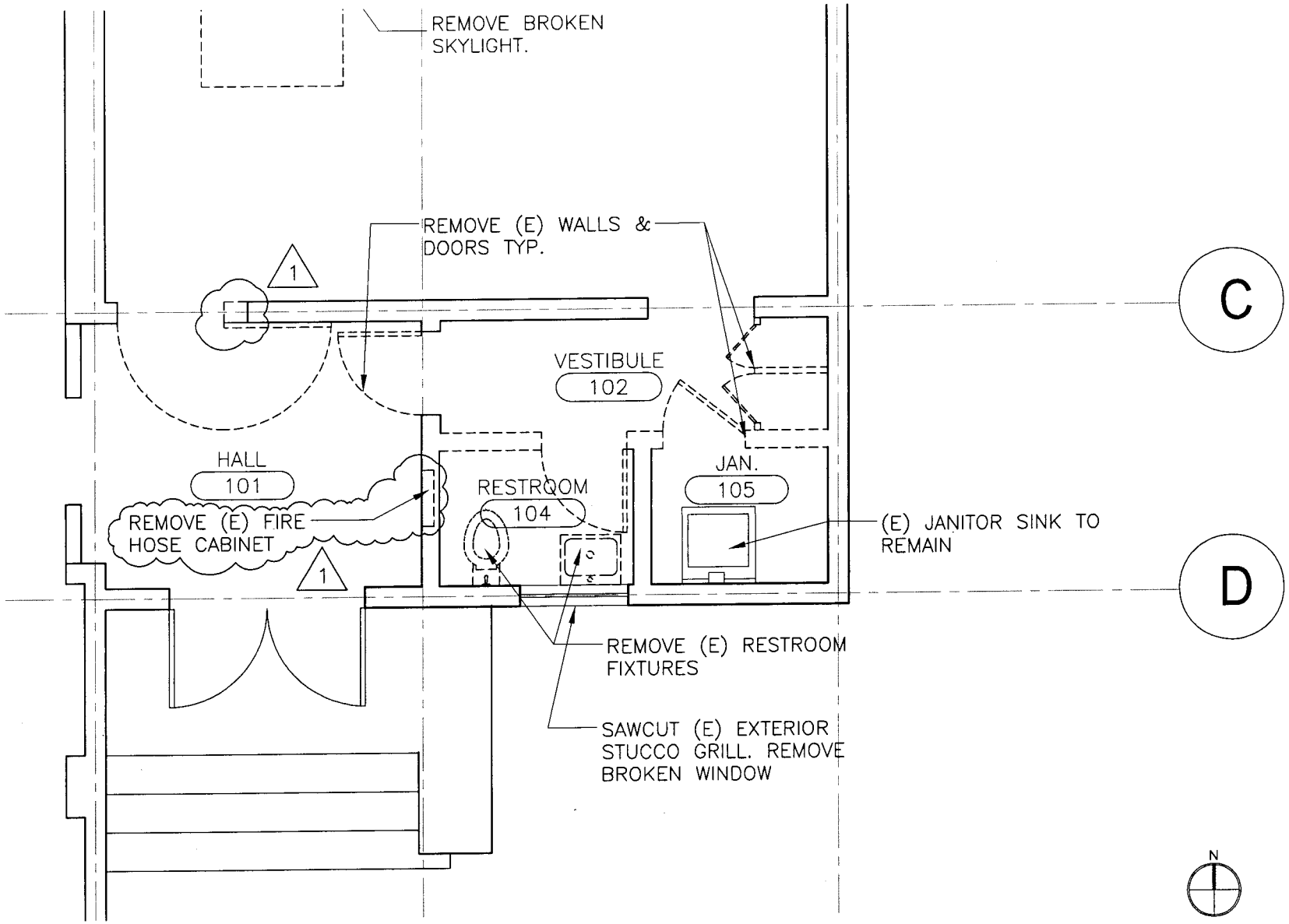

folio
architects
39812 mission boulevard ste 222
fremont, ca 94539
tel: 510-226-7525
fax: 510-226-1360

PROJECT. NO.
0810

REFERENCE SHEET:
A-2

TITLE
Addendum 2
Demolition Plan

PROJECT
Willows Sr. Cntr. Fire Damage Repair

SCALE
1/4"=1'-0"

DATE
28 Aug '08

SHEET NO.
AD-2.1

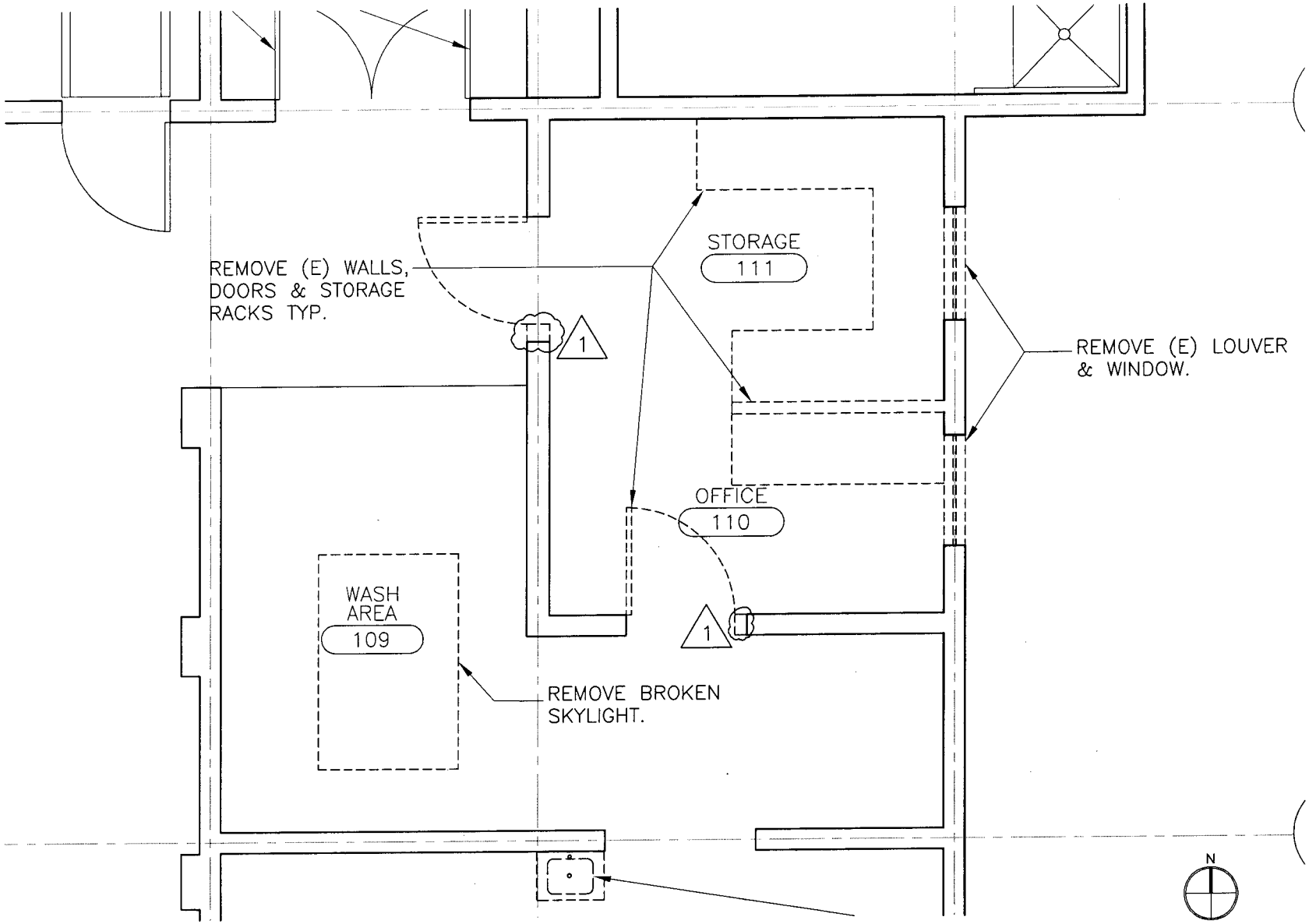

folio
architects
39812 mission boulevard ste 222
fremont, ca 94539
tel: 510-226-7525
fax: 510-226-1360

PROJECT. NO.
0810

REFERENCE SHEET:
A-2

TITLE
Addendum 2
Demolition Plan

PROJECT
Willows Sr. Cntr. Fire Damage Repair

SCALE
1/4"=1'-0"

DATE
28 Aug '08

SHEET NO.
AD-2.2

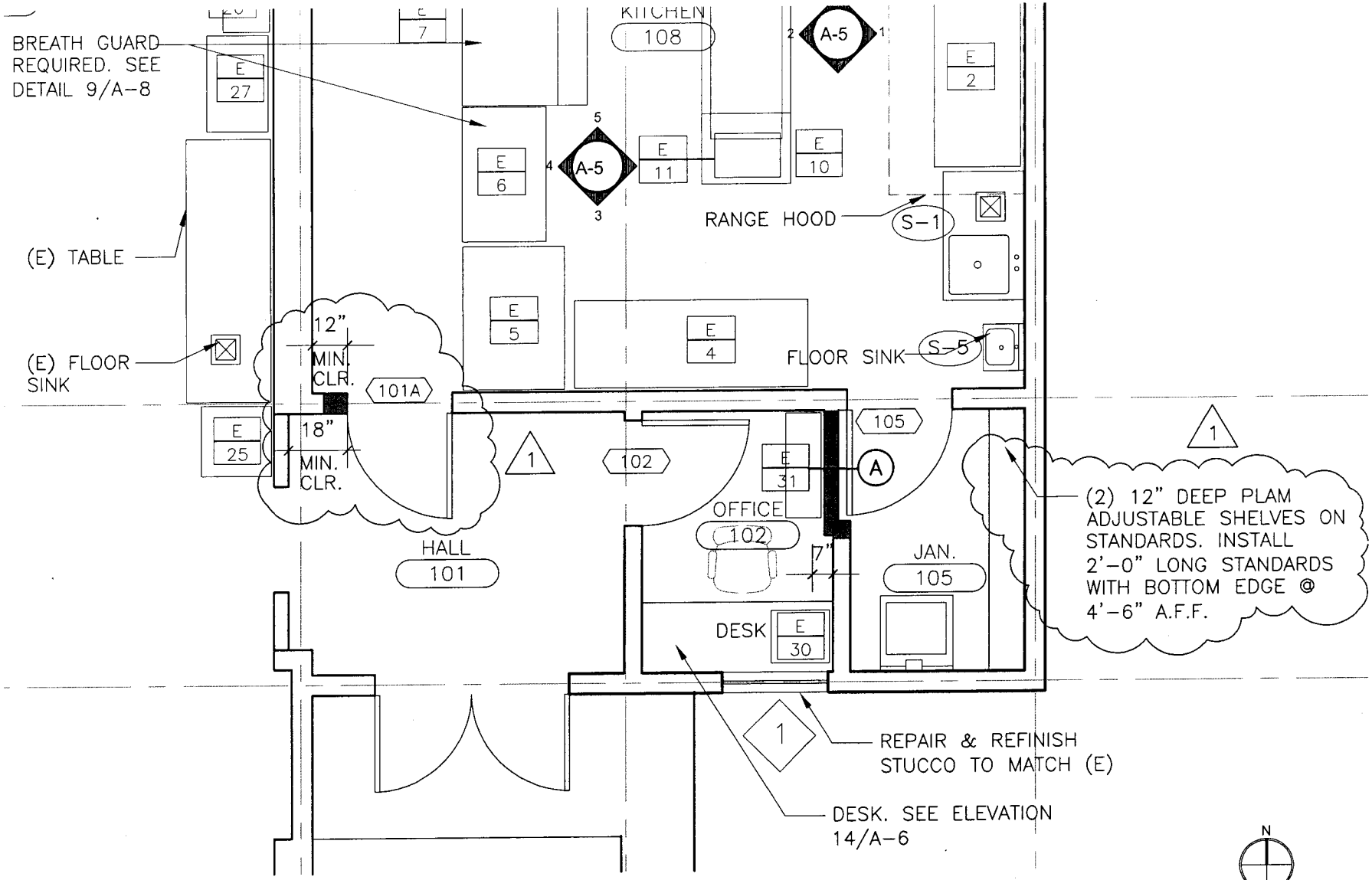

folio
architects
39812 mission boulevard ste 222
fremont, ca 94539
tel: 510-226-7525
fax: 510-226-1360

PROJECT. NO.
0810

REFERENCE SHEET:
A-3

TITLE
Addendum 2
Proposed Plan

PROJECT
Willows Sr. Cntr. Fire Damage Repair

SCALE
1/4"=1'-0"

DATE
28 Aug '08

SHEET NO.
AD-2.3

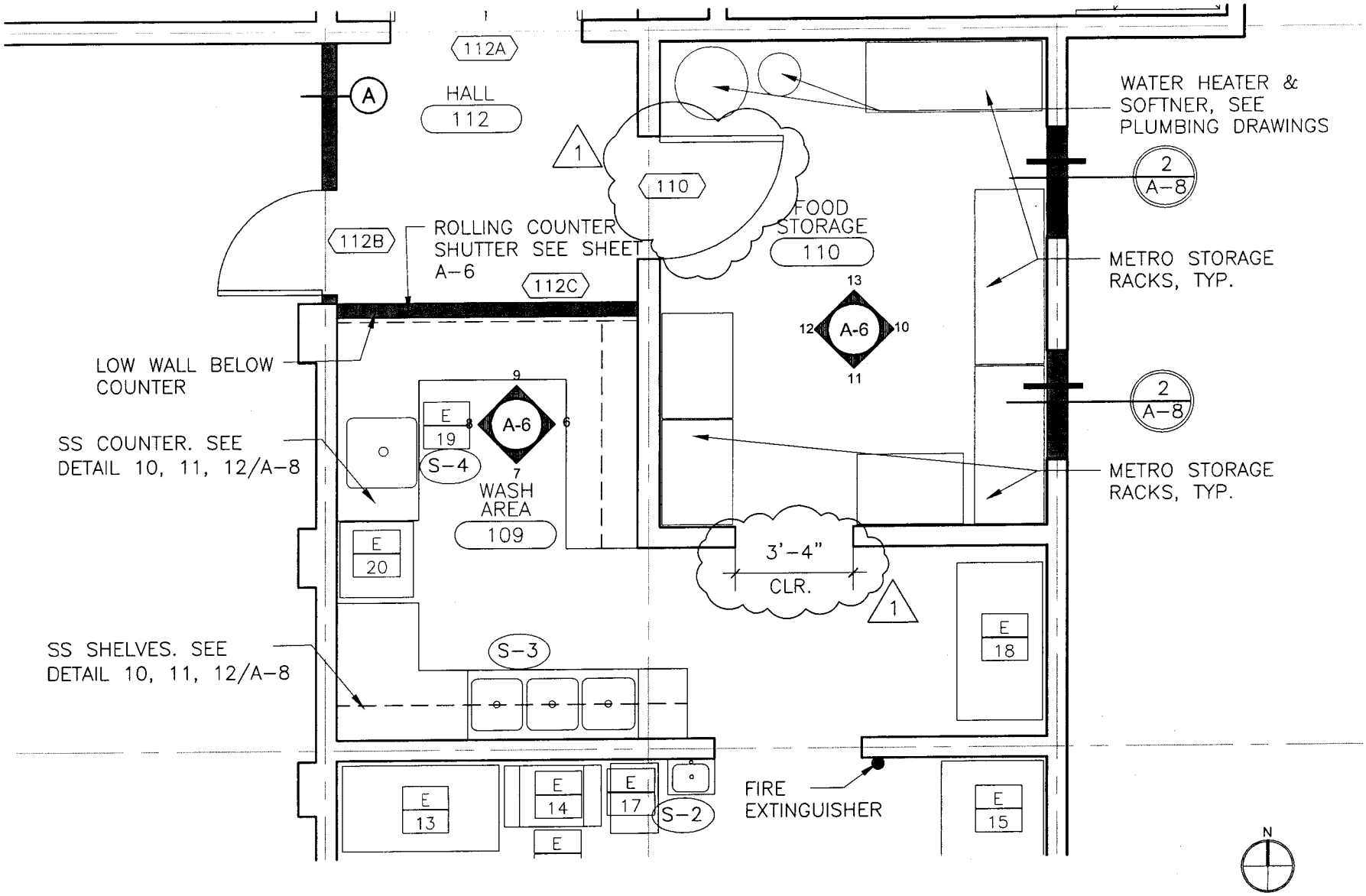

folio
architects
39812 mission
boulevard ste 222
fremont, ca 94539
tel: 510-226-7525
fax: 510-226-1360

PROJECT. NO.
0810

REFERENCE SHEET:
A-3

TITLE
Addendum 2
Proposed Plan

PROJECT
Willows Sr. Cntr. Fire Damage Repair

SCALE
1/4"=1'-0"

DATE
28 Aug '08

SHEET NO.
AD-2.4

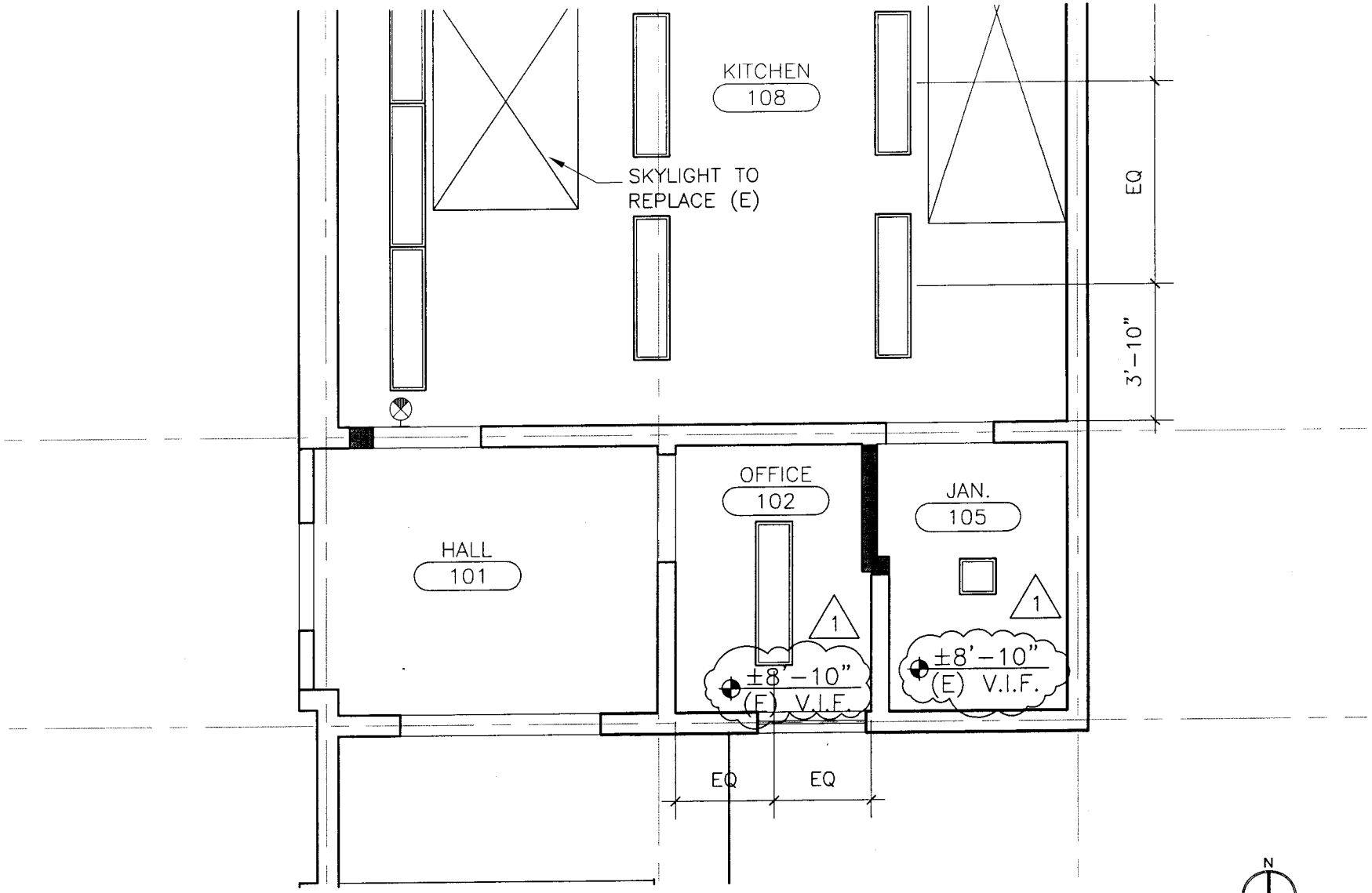

folio
architects
39812 mission
boulevard ste 222
fremont, ca 94539
tel: 510-226-7525
fax: 510-226-1360

PROJECT. NO.
0810

REFERENCE SHEET:
A-4

TITLE
Addendum 2
Reflected Ceiling Plan

PROJECT
Willows Sr. Cntr. Fire Damage Repair

SCALE
1/4"=1'-0"

DATE
28 Aug '08

SHEET NO.
AD-2.5

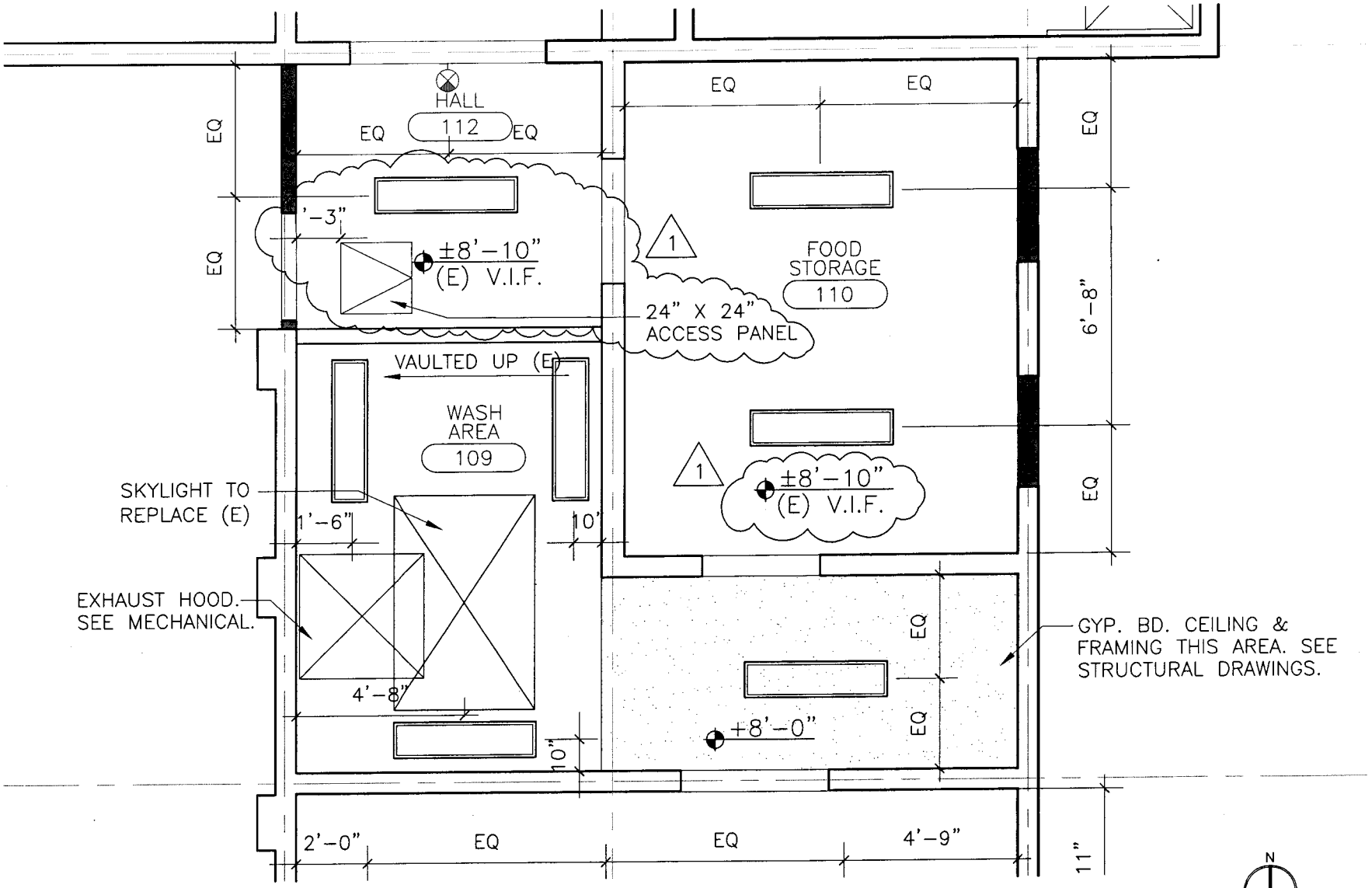

folio
architects
39812 mission
boulevard ste 222
fremont, ca 94539
tel: 510-226-7525
fax: 510-226-1360

PROJECT. NO.
0810

REFERENCE SHEET:
A-4

TITLE
Addendum 2
Reflected Ceiling Plan

PROJECT
Willows Sr. Cntr. Fire Damage Repair

SCALE
1/4"=1'-0"

DATE
28 Aug '08

SHEET NO.
AD-2.6

INTERIOR DOOR SCHEDULE

DOOR NO.	ROOM NO.	ROOM NAME	DOOR SIZE (WxH)	TYPE	CONST.	FINISH	GLASS	FRAME	HARDWARE GROUP	RATING	HEAD DETAIL	JAMB DETAIL	REMARKS
101A	101	HALL	3'-0" x 7'-0"	B	WD	P	T	HM	2	–	7/A-8	7/A-8	(E)
102	102	OFFICE	3'-0" x 7'-0"	A	WD	P	–	HM	1	–	7/A-8	7/A-8	
105	105	JAN.	3'-0" x 7'-0"	A	WD	P	–	HM	3	–	7/A-8	7/A-8	
108	108	KITCHEN	3'-0" x 7'-0"	A	WD	P	–	HM	4	–	7/A-8	7/A-8	
110	110	FOOD STORAGE	3'-6" x 7'-0"	A	WD	P	–	HM	2	–	7/A-8	7/A-8	
112A	112	HALL	6'-0" x 7'-0"	BB	WD	P	T	–	–	–	–	–	(E) DOOR, REPLACE GLASS
112B	112	HALL	3'-0" x 7'-0"	A	WD	P	–	HM	5	–	7/A-8	7/A-8	
112C	112	HALL	V.I.F.	–	AL	–	–	–	–	–	–	–	SEE SPECIFICATION 10920

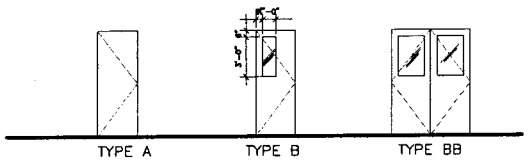

DOOR LEGEND

AL	ALUMINUM
HM	HOLLOW METAL
P	PAINTED
T	TEMPERED SAFETY GLASS
WD	WOOD

FINISH SCHEDULE

ROOM NO.	ROOM NAME	FLOOR	WALLS	BASE	CEILING	CEILING HT	REMARKS
101	HALL	–	–	–	–	–	(E) TO REMAIN
102	OFFICE	VCT	GB-E	TB	GB-E	(E)	
105	JAN.	EP	GB-S	COVE	GB-S	(E)	
108	KITCHEN	EP	GB-S/SS	COVE	GB-S	(E)	
109	WASH AREA	EP	GB-S/SS	COVE	GB-S	(E)	
110	FOOD STORAGE	EP	GB-S	COVE	GB-S	(E)	
112	HALL	VCT	GB-E	TB	GB-E	(E)	

FINISH LEGEND

FLOOR

CONC	SEALED CONCRETE
EP	EPOXY COATING ON CONCRETE FLOOR
TILE	CERAMIC TILE
VCT	VINYL COMPOSITION TILE

BASE

COVE	4" INTEGRAL COVE
TB	6" TOPSET BASE

WALL

FINISH NOTES

1. ALL WALLS AND CEILINGS ARE PAINTED P1, U.N.O.
2. ALL GYP. BD. AT JANITOR'S CLOSET SHALL BE WATER RESISTANT. PROVIDE FRP PANELS TO 4'-6" ON ALL WALLS IN JAN. 105.
3.
4. WORK AT EXTERIOR WALL WILL INCLUDE, INFILLING (E) OPENING, PATCH AND PAINT TO MATCH (E) TEXTURE AND COLOR.

LEGEND

folio
architects
39812 mission boulevard ste 222
fremont, ca 94539
tel: 510-226-7525
fax: 510-226-1360

PROJECT. NO. 0810

REFERENCE SHEET: A-7

TITLE: Addendum 2 Door & Finish Schedule

PROJECT: Willows Sr. Cntr. Fire Damage Repair

SCALE: NTS

DATE: 28 Aug '08

SHEET NO. AD-2.7

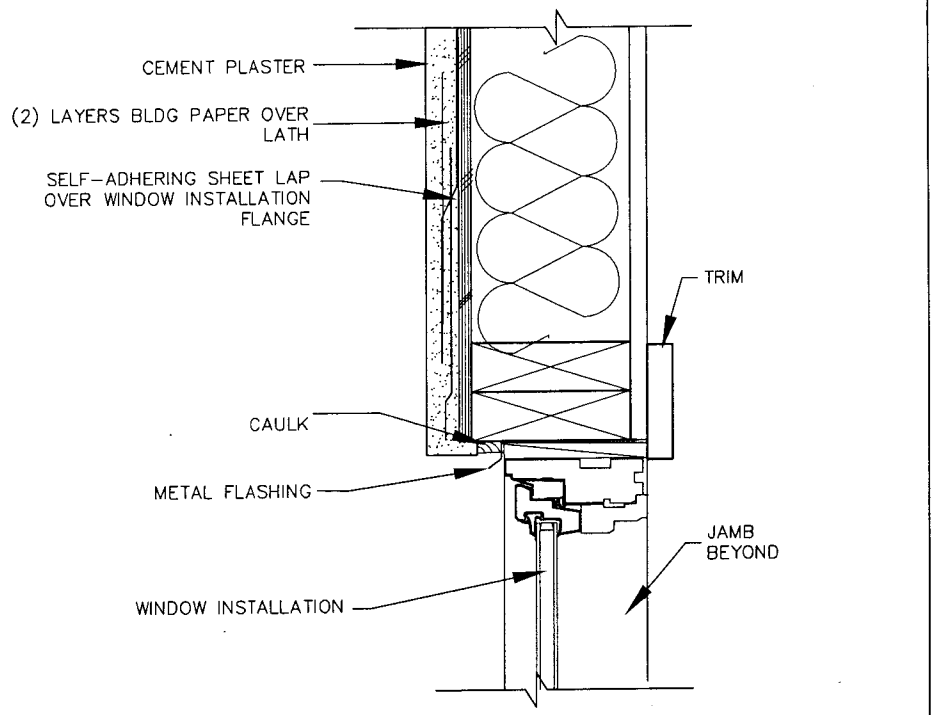

WINDOW HEAD - JAMB SIM.
3"=1'-0"

1

1

folio
architects
39812 mission boulevard ste 222
fremont, ca 94539
tel: 510-226-7525
fax: 510-226-1360

PROJECT. NO.
0810

REFERENCE SHEET:
A-7

TITLE
Addendum 2
Window Head-Jamb detail

PROJECT
Willows Sr. Cntr. Fire Damage Repair

SCALE
NTS

DATE
28 Aug '08

SHEET NO.
AD-2.8

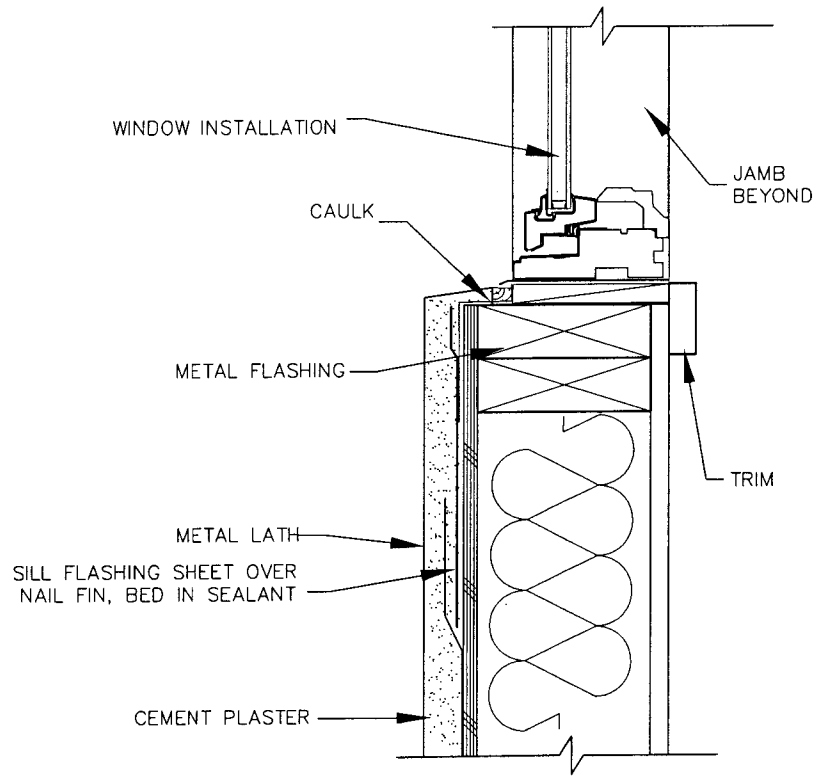

WINDOW SILL DETAIL

3"=1'-0"

1

2

folio
architects
39812 mission
boulevard ste 222
fremont, ca 94539
tel: 510-226-7525
fax: 510-226-1360

PROJECT. NO.	TITLE	SCALE	SHEET NO.
0810	Addendum 2 Window Sill Detail	NTS	
REFERENCE SHEET:	PROJECT	DATE	
A-7	Willows Sr. Cntr. Fire Damage Repair	28 Aug '08	AD-2.9

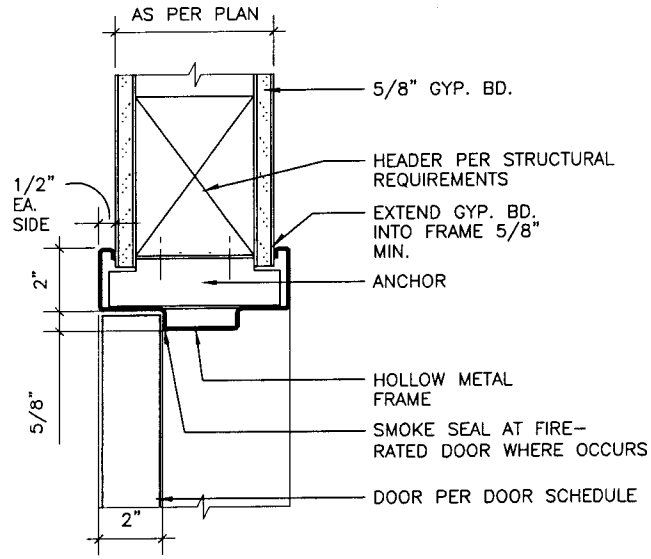

1

7

DOOR HEAD - JAMB SIM.

3"=1'-0"

folio
architects
39812 mission boulevard ste 222
fremont, ca 94539
tel: 510-226-7525
fax: 510-226-1360

PROJECT. NO.
0810

REFERENCE SHEET:
A-8

TITLE
Addendum 2
Door Head Detail

PROJECT
Willows Sr. Cntr. Fire Damage Repair

SCALE
1/4"=1'-0"

DATE
28 Aug '08

SHEET NO.
AD-2.10

NOTES:

4 42x30 OUTSIDE AIR LOUVER MOUNTED ABOVE CANOPY. 6 1

5 24x14 EXHAUST AIR LOUVER, BOTTOM OF LOUVER AT ±9'-6" AFF 6 1

6 OUTSIDE AIR LOUVER "RUSKIN" MODEL ELF811DD ALUMINUM DRAINABLE STATIONARY LOUVER, 44% FREE AREA, ¾"x0.051" ALUMINUM BIRDSCREEN. SEE ARCHITECTURAL DETAILS 5 & 6 SHEET A-8 1

7 BOTTOM OF GRILLE AT ±8'-6" AFF. 1

13 EXHAUST FAN ACCESS PANEL 1

19 1¼"HWS&R TO CONNECT TO UNIT, SEE DIAGRAM 4/M-3. 1

20 1¼"HWS&R INSIDE WALL DOWN TO CRAWL SPACE, FOR CONTINUATION SEE SHEET M-4.

21 INSULATE GREASE EXHAUST DUCT WITH ONE LAYER OF "3M" FIRE MASTER DUCT WRAP TO PROVIDE ONE HOUR FIRE RESISTANCE ENCLOSURE. INSTALL PER MANUFACTURER RECOMMENDATION.

A C K E R M A N
P R A C T I C O N
CONSOLIDATED TECHNICAL SERVICES
801 E. CHARLESTON ROAD 650 . 965 . 1000
PALO ALTO, CA 94303 FAX: 650 . 494 . 9312
A-P PROJECT NUMBER: 07114

N

folio
architects
39812 mission
boulevard ste 222
fremont, ca 94539
tel: 510-226-7525
fax: 510-226-1360

PROJECT. NO.	TITLE	SCALE	SHEET NO.
07114	Addendum 2	NONE	
REFERENCE SHEET: M-2	PROJECT Willows Sr. Cntr. Fire Damage Repair	DATE 27 Aug '08	MAD-2.1

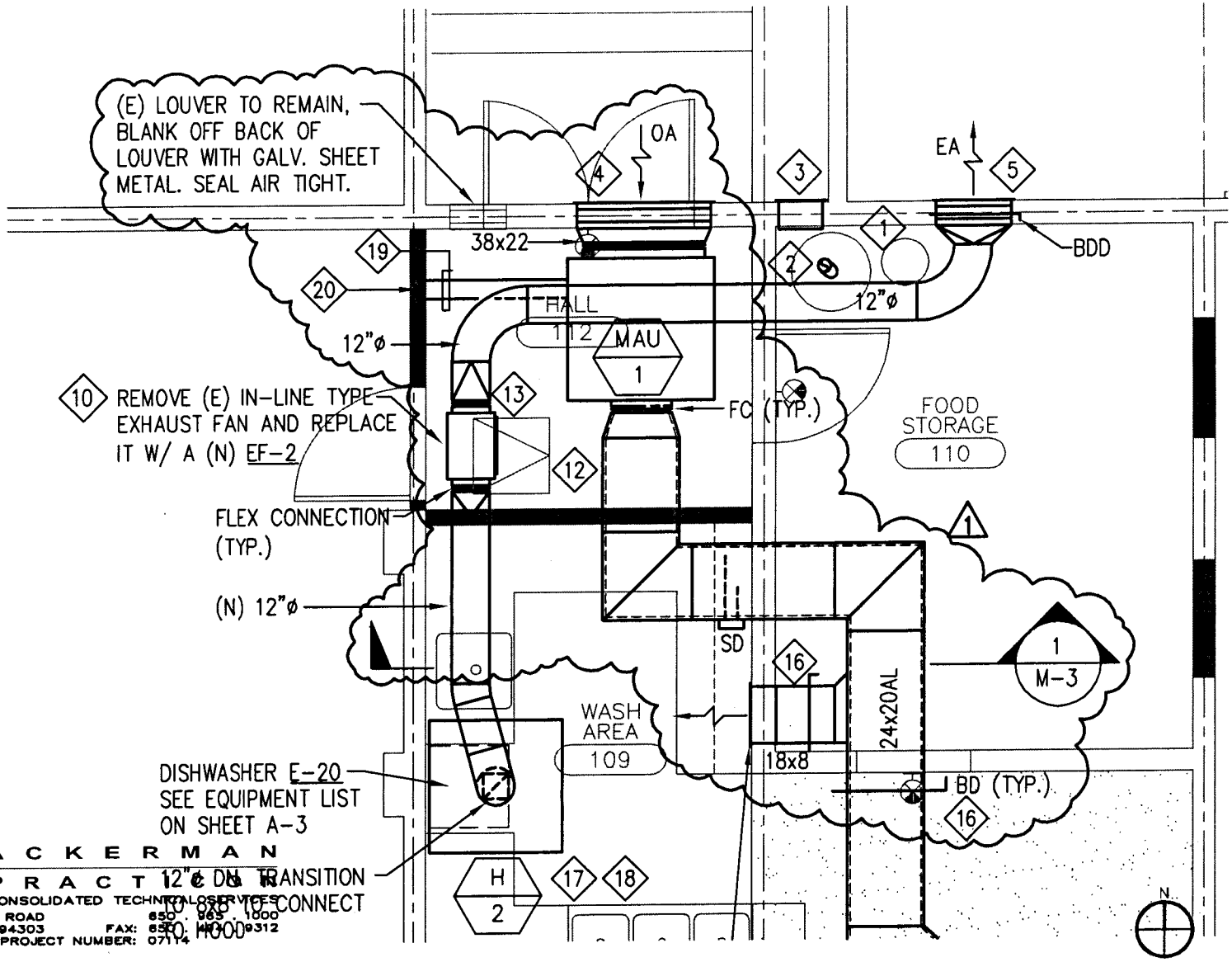

ACKERMAN PRACT
CONSOLIDATED TECHNOLOGY SERVICES
801 E. CHARLESTON ROAD
PALO ALTO, CA 94303
650 . 965 . 1000
FAX: 650 . 493 . 9312
A-P PROJECT NUMBER: 07114

folio architects
39812 mission boulevard ste 222
fremont, ca 94539
tel: 510-226-7525
fax: 510-226-1360

PROJECT. NO.	TITLE	SCALE	SHEET NO.
07114	Addendum 2	1/4"=1'-0"	
REFERENCE SHEET: M-2	PROJECT Willows Sr. Cntr. Fire Damage Repair	DATE 27 Aug '08	MAD-2.2

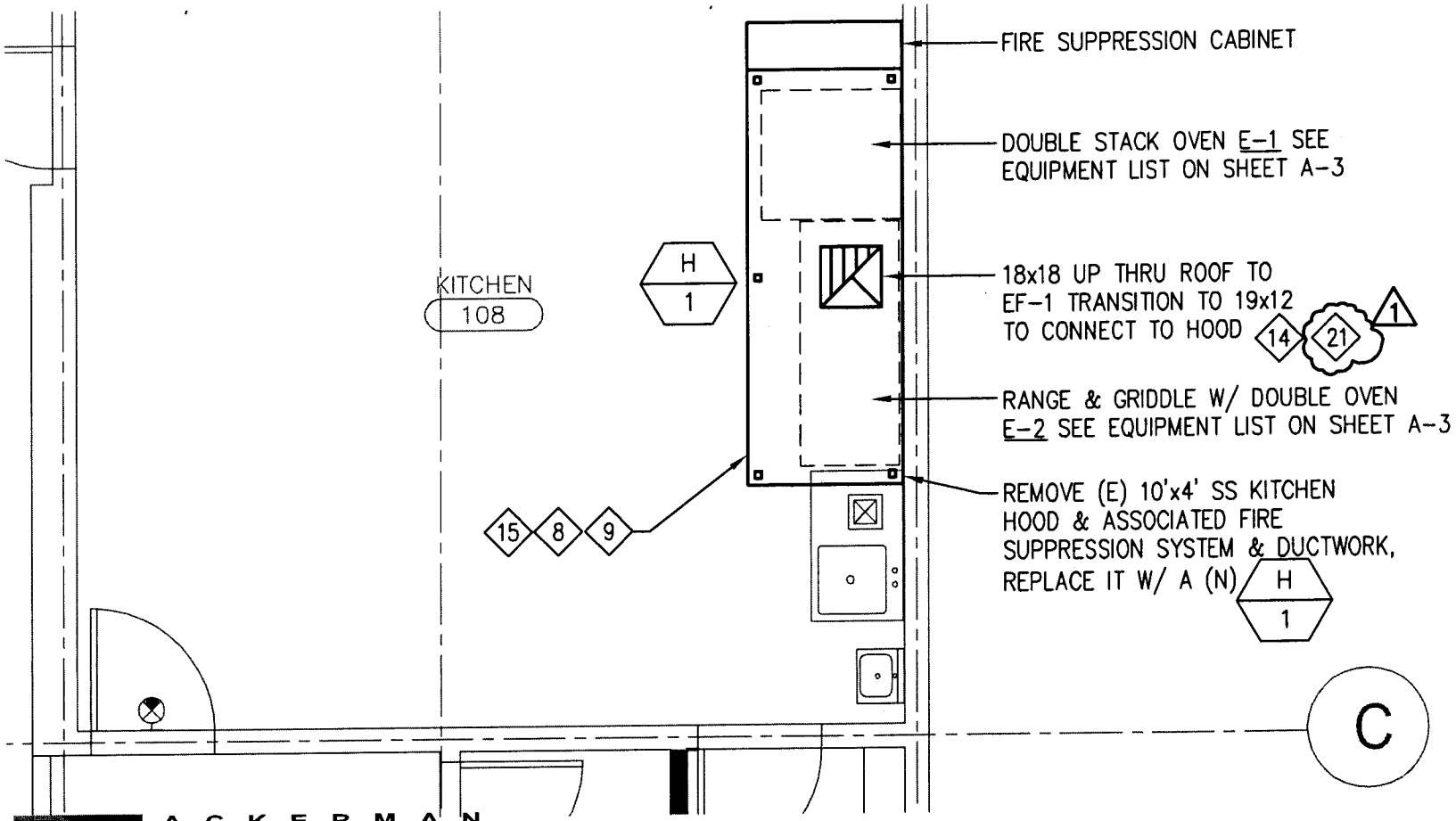

ACKERMAN PRACTICON
CONSOLIDATED TECHNICAL SERVICES
801 E. CHARLESTON ROAD 650 . 965 . 1000
PALO ALTO, CA 94303 FAX: 650 . 494 . 9312
A-P PROJECT NUMBER: 07114

N

folio
architects
39812 mission boulevard ste 222
fremont, ca 94539
tel: 510-226-7525
fax: 510-226-1360

PROJECT. NO.	TITLE	SCALE	SHEET NO.
07114	Addendum 2	1/4"=1'-0"	
REFERENCE SHEET: M-2	PROJECT Willows Sr. Cntr. Fire Damage Repair	DATE 27 Aug '08	MAD-2.3

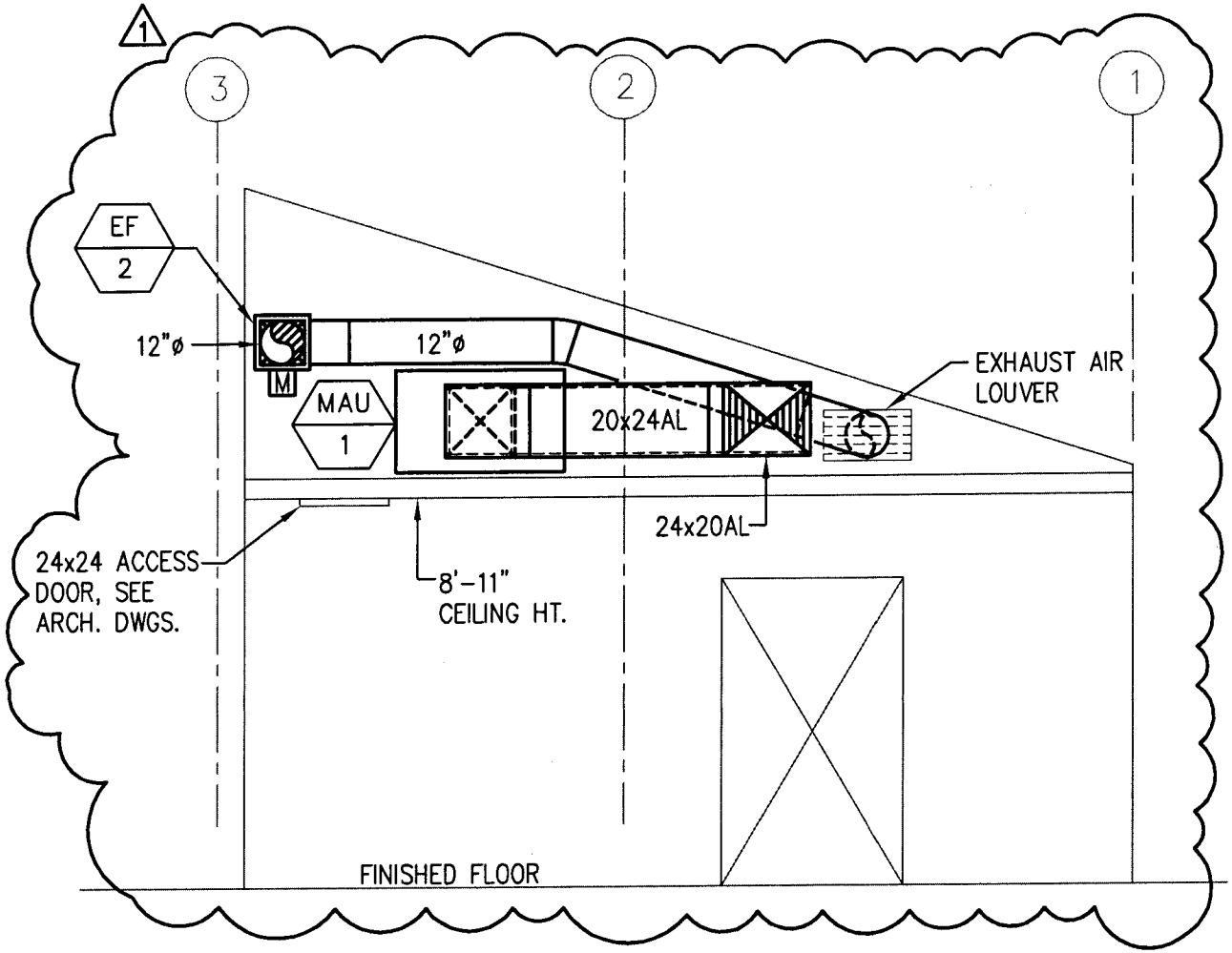

A C K E R M A N
P R A C T I C O N
CONSOLIDATED TECHNICAL SERVICES
801 E. CHARLESTON ROAD 650 . 965 . 1000
PALO ALTO, CA 94303 FAX: 650 . 494 . 9312
A-P PROJECT NUMBER: 07114

1 KITCHEN SECTION
1/4" = 1'-0"

N

folio
architects
39812 mission
boulevard ste 222
fremont, ca 94539
tel: 510-226-7525
fax: 510-226-1360

PROJECT. NO.	TITLE	SCALE	SHEET NO.
07114	Addendum 2	AS NOTED	
REFERENCE SHEET: M-3	PROJECT Willows Sr. Cntr. Fire Damage Repair	DATE 27 Aug '08	MAD-2.4

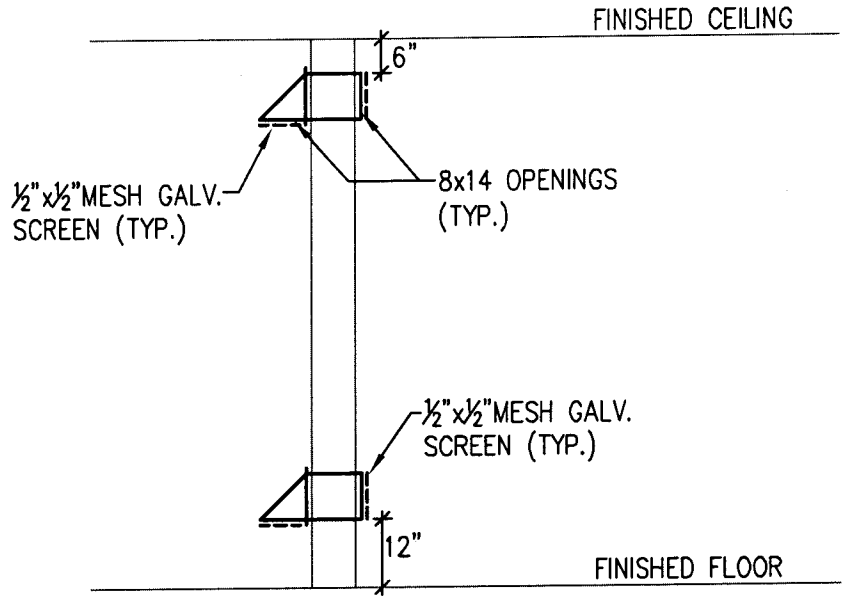

NOTE: SECURE EACH CORNER OF THE WALL VENT TO THE WALL FRAME. USE WALL ANCHOR IF REQUIRED. SEAL WALL PENETRATION WEATHER TIGHT USING OUTDOOR SILICONE SEALANT. 1

7 WH COMBUSTION AIR OPENINGS DETAIL

NO SCALE

A C K E R M A N
P R A C T I C O N
CONSOLIDATED TECHNICAL SERVICES
801 E. CHARLESTON ROAD 650 . 985 . 1000
PALO ALTO, CA 94303 FAX: 650 . 494 . 9312
A-P PROJECT NUMBER: 07114

N

folio
architects
39812 mission
boulevard ste 222
fremont, ca 94539
tel: 510-226-7525
fax: 510-226-1360

PROJECT. NO.	TITLE	SCALE	SHEET NO.
07114	Addendum 2	AS NOTED	
REFERENCE SHEET: M-3	PROJECT Willows Sr. Cntr. Fire Damage Repair	DATE 27 Aug '08	MAD-2.5

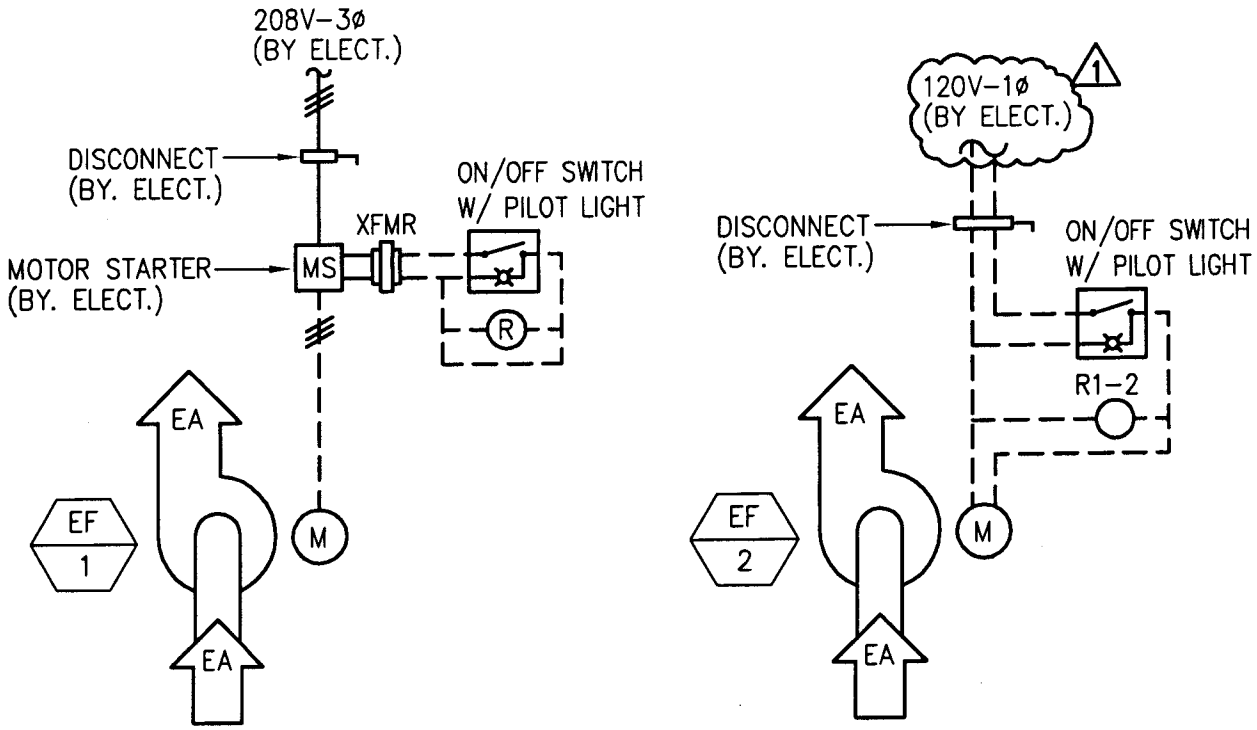

9 HOODS EXHAUST FAN CONTROL

NOT TO SCALE

ACKERMAN PRACTICON
CONSOLIDATED TECHNICAL SERVICES
801 E. CHARLESTON ROAD 650 . 965 . 1000
PALO ALTO, CA 94303 FAX: 650 . 494 . 9312
A-P PROJECT NUMBER: 07114

folio architects
39812 mission boulevard ste 222
fremont, ca 94539
tel: 510-226-7525
fax: 510-226-1360

PROJECT. NO.	TITLE	SCALE	SHEET NO.
07114	Addendum 2	AS NOTED	
REFERENCE SHEET: M-3	PROJECT Willows Sr. Cntr. Fire Damage Repair	DATE 27 Aug '08	MAD-2.6

LIGHTING FIXTURE SCHEDULE

TYPE	DESCRITION
A	RECESSED GYP. CEILING FLUORESCENT, 1'X4'X4.5" DEEP NOMINAL STEEL HOUSING, FIVE-STAGE IRON-PHOSPHATE PRETREATMENT, WHITE ENAMEL FINISH, MIN. 85% REFLECTANCE; FLAT ALUMINUM DOOR FRAME WITH MITERED CORNER, WHITE ENAMEL FINISH; WITH PRISMATIC ACRYLIC LENS, MIN. 0.125" THICK, KSH PATTERN 12; WITH T-HINGES AND SPRING LOADED CAM LATCHES - HINGES/LATCHES FROM EITHER SIDE, TWO-F32T8 LAMPS WITH ONE ELECTRONIC BALLAST & 90 MINUTES INTEGRAL EMERGENCY BATTERY PACK DAYBRITE 2DP SERIES H.E. WILLIAMS EPG-S24 SERIES LITHONIA SP SERIES OR EQUAL

A C K E R M A N
P R A C T I C O N
CONSOLIDATED TECHNICAL SERVICES
801 E. CHARLESTON ROAD 650 . 965 . 1000
PALO ALTO, CA 94303 FAX: 650 . 494 . 9312
A-P PROJECT NUMBER: 07114

N

folio
architects
39812 mission boulevard ste 222
fremont, ca 94539
tel: 510-226-7525
fax: 510-226-1360

PROJECT. NO.	TITLE	SCALE	SHEET NO.
07114	Addendum 2	NONE	
REFERENCE SHEET:	PROJECT	DATE	
E3	Willows Sr. Cntr. Fire Damage Repair	27 Aug '08	EAD-3.1

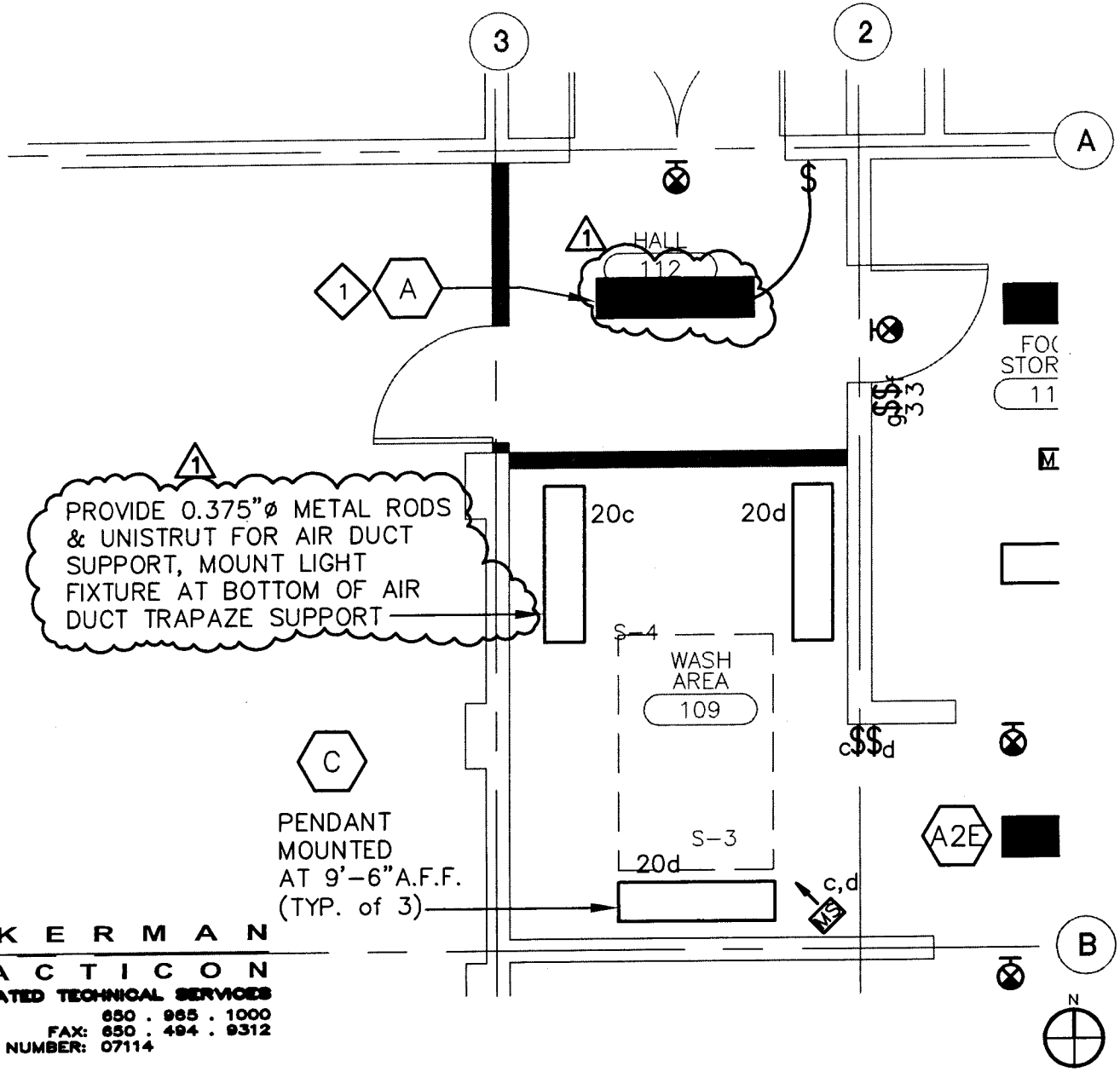

ACKERMAN PRACTICON
CONSOLIDATED TECHNICAL SERVICES
801 E. CHARLESTON ROAD
PALO ALTO, CA 94303
650 . 965 . 1000
FAX: 650 . 494 . 9312
A-P PROJECT NUMBER: 07114

folio architects
39812 mission boulevard ste 222
fremont, ca 94539
tel: 510-226-7525
fax: 510-226-1360

PROJECT. NO.	TITLE	SCALE	SHEET NO.
07114	Addendum 2	1/8"=1'-0"	EAD-3.2
REFERENCE SHEET: E3	PROJECT Willows Sr. Cntr. Fire Damage Repair	DATE 27 Aug '08	

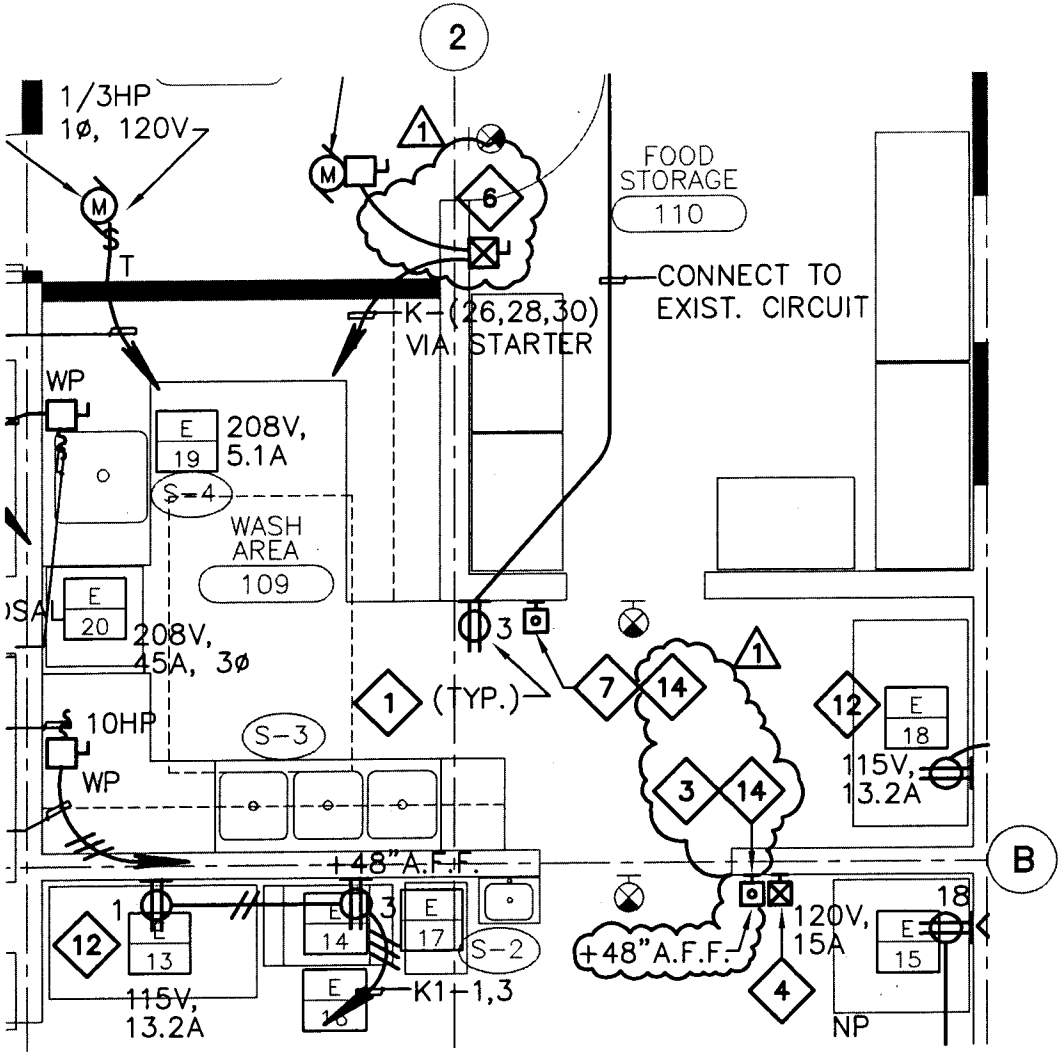

ACKERMAN PRACTICON
CONSOLIDATED TECHNICAL SERVICES
801 E. CHARLESTON ROAD
PALO ALTO, CA 94303
650 . 965 . 1000
FAX: 650 . 494 . 9312
A-P PROJECT NUMBER: 07114

folio architects
39812 mission boulevard ste 222
fremont, ca 94539
tel: 510-226-7525
fax: 510-226-1360

PROJECT. NO.	TITLE	SCALE	SHEET NO.
07114	Addendum 2	1/8"=1'-0"	EAD-4.1
REFERENCE SHEET: E4	PROJECT Willows Sr. Cntr. Fire Damage Repair	DATE 27 Aug '08	

DETAIL NOTES:

1

3 EF-3 MANUAL STARTER WITH D3 OVERLOAD PROTECTION PER PHASE, AUX. 120V 5A CONTACT START/STOP & GREEN 'RUN' LED LIGHTING.

4 HOOD FIRE SUPPRESSION SYSTEM MANUAL PULL STATION. MOUNT 12" ON TOP OF STARTER.

5 PROVIDE (N) RECEPTACLES, FACE PLATES AND WIRING, REUSE (E) CIRCUITS.

1

6 MAKE-UP AIR UNIT COMBINATION STARTER WITH START/STOP & GREEN 'RUN' LED LIGHTING.

7 EF-2 MANUAL STARTER WITH D3 OVERLOAD PROTECTION PER PHASE, AUX. 120V 5A CONTACT START/STOP & GREEN 'RUN' LED LIGHTING.

1

14 PROVIDE CONTROL WIRING 0.5"C-2#12 BETWEEN MANUAL STARTER EF-2 AND 3 AND MAU-1 STARTER SO THAT WHEN EX-FAN ON, THE MAU-1 WILL RUN AT THE SAME TIME.

A C K E R M A N
P R A C T I C O N
CONSOLIDATED TECHNICAL SERVICES
801 E. CHARLESTON ROAD 650 . 965 . 1000
PALO ALTO, CA 94303 FAX: 650 . 494 . 9312
A-P PROJECT NUMBER: 07114

N

folio
architects
39812 mission boulevard ste 222
fremont, ca 94539
tel: 510-226-7525
fax: 510-226-1360

PROJECT. NO.	TITLE	SCALE	SHEET NO.
07114	Addendum 2	1/8"=1'-0"	
REFERENCE SHEET:	PROJECT	DATE	
E4	Willows Sr. Cntr. Fire Damage Repair	27 Aug '08	EAD-4.2

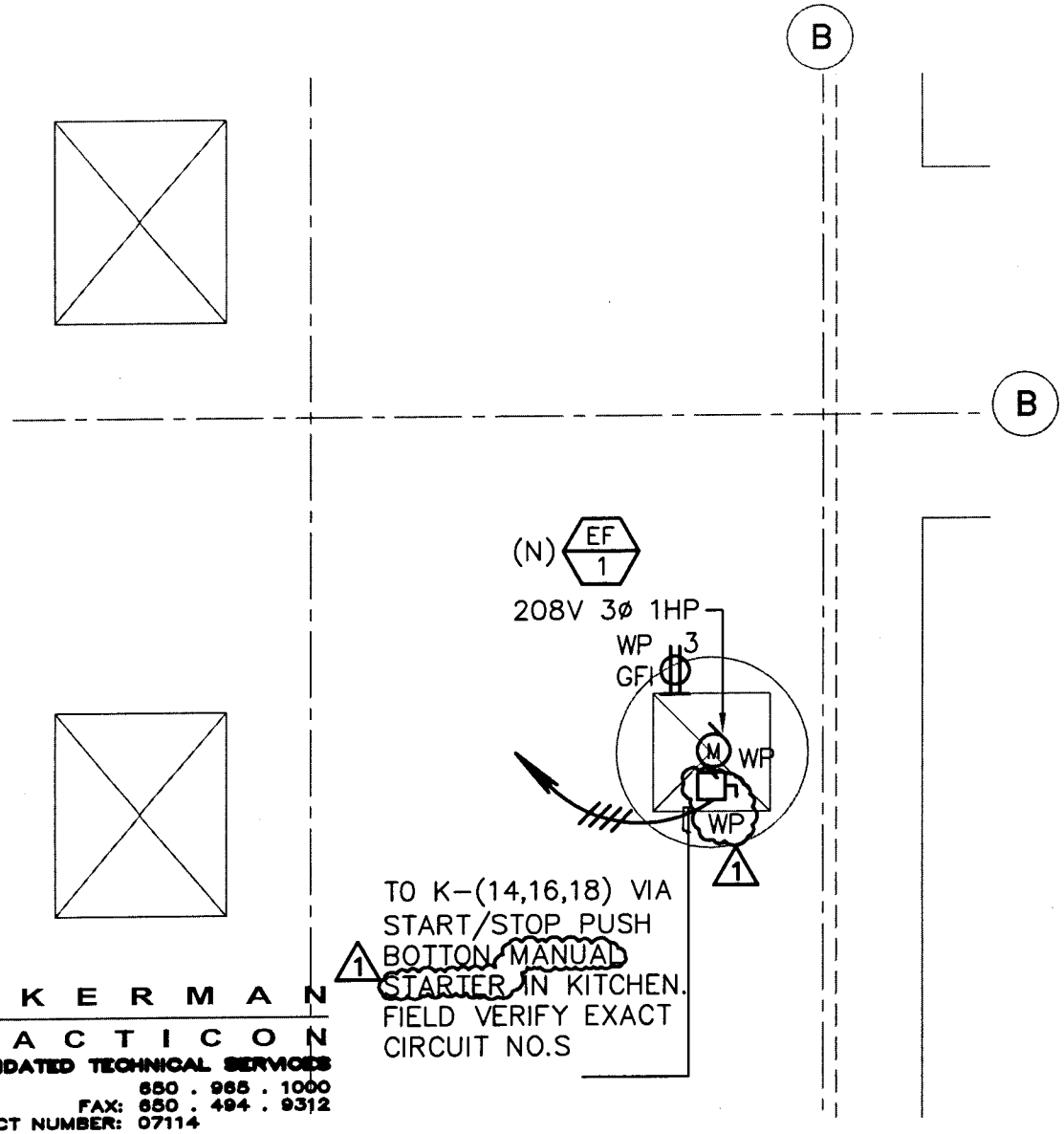

A C K E R M A N
P R A C T I C O N
CONSOLIDATED TECHNICAL SERVICES
801 E. CHARLESTON ROAD 650 . 965 . 1000
PALO ALTO, CA 94303 FAX: 650 . 494 . 9312
A-P PROJECT NUMBER: 07114

N

folio
architects
39812 mission
boulevard ste 222
fremont, ca 94539
tel: 510-226-7525
fax: 510-226-1360

PROJECT. NO.	TITLE	SCALE	SHEET NO.
07114	Addendum 2	1/8"=1'-0"	
REFERENCE SHEET:	PROJECT	DATE	
E4	Willows Sr. Cntr. Fire Damage Repair	27 Aug '08	EAD-4.3

BENCHMARK
ENVIRONMENTAL ENGINEERING
A DIVISION OF UPIN INC.

CORPORATE OFFICE 3732 Charter Park Drive • Suite A • San Jose CA 95136
408.448.7594 PHONE • 800.988.7424 TOLL FREE • 408.448.3849 FAX
www.benchmarkenvironmental.com

July 26, 2007

Behilma Magday
City of San Jose - General Services
1661 Senter Road
San Jose, CA 95136

Re: Asbestos Sample Collection
Willow Glen Senior Center, 2175 Lincoln Avenue, San Jose
Benchmark Project #E07-897-ASC

ASBESTOS-NONE DETECTED

Dear Ms. Magday:

In accordance with our verbal agreement, while working under the supervision of a California Certified Asbestos Consultant, Industrial Hygiene Associate, Rob LoGrasso performed a limited building survey for asbestos containing materials (ACM) at 2175 Lincoln Avenue, San Jose, CA on July 24, 2007. A fire damaged a portion of the senior center. Only those materials damaged by the fire and/or fire suppression activities were sampled. All other materials are presumed to contain asbestos until sampled.

Benchmark inspected materials in general accordance with the Environmental Protection Agency (EPA) National Emission Standards for Hazardous Air Pollutants (NESHAP) building demolition requirements.

Benchmark was contracted to conduct sampling of suspect asbestos containing materials in pre-designated areas only. The materials sampled will not provide inclusive information as to the presence of asbestos on the property site and is strictly limited to the materials sampled and analyzed.

Ten (10) samples of suspect asbestos containing materials were collected on the property site and submitted for analysis. The following table provides information on the materials sampled.

Material	Location	% Asbestos
Cove Base/Mastic	Kitchen	None Detected
Floor tile and Mastic	Kitchen	None Detected
Wallboard/joint compound	Throughout	None Detected
Window Glaze	Exterior Windows	None Detected

Findings:

Laboratory results (see attached) indicated that the samples submitted of the presumed materials did not contain asbestos. A material is considered by the EPA to be asbestos-containing if at least one sample collected from the area shows asbestos present in an amount greater than one percent (> 1%).

Findings:

Laboratory results (see attached) indicated that the samples submitted of the presumed materials did not contain asbestos. A material is considered by the EPA to be asbestos-containing if at least one sample collected from the area shows asbestos present in an amount greater than one percent (> 1%).

Only samples of the wallboard and skim coat/joint compound, floor file, window putty/glazing and cove base/mastic were submitted for analysis. All other finishing materials within the residence are presumed to contain asbestos and should be sampled prior to disturbance.

The laboratory that conducted the analysis was Forensic Analytical located in Hayward, California. The analytical results and chain of custody are attached.

We appreciate this opportunity to provide professional services for this project. If we can be of further assistance, or if you have any questions concerning this report, please do not hesitate to contact our office at (408) 448-7594.

Sincerely,
Benchmark Environmental Engineering

Terri MacFarlane, CAC #90-2747
Environmental Field Service Manager

Enclosure

Forensic Analytical

Final Report

Bulk Asbestos Analysis

(EPA Method 600/R-93-116, Visual Area Estimation)

Benchmark Environmental
Project Manager

3732-A Charter Park Drive
San Jose, CA 95136

Client ID: 3565
Report Number: B102012
Date Received: 07/25/07
Date Analyzed: 07/26/07
Date Printed: 07/26/07
First Reported: 07/26/07

Job ID/Site: E07-897-ASC - 2175 Lincoln Avenue, San Jose

FASI Job ID: 3565

Date(s) Collected: 07/24/2007

Total Samples Submitted: 10
Total Samples Analyzed: 10

Sample ID	Lab Number	Asbestos Type	Percent in Layer	Asbestos Type	Percent in Layer	Asbestos Type	Percent in Layer
E07-897-7-24-1B	10663940						
Layer: Off-White Non-Fibrous Material			**ND**				
Layer: Off-White Mastic			**ND**				
Total Composite Values of Fibrous Components:		**Asbestos (ND)**					
Cellulose (Trace)							
E07-897-7-24-2B	10663941						
Layer: Off-White Tile			**ND**				
Layer: Black Mastic			**ND**				
Layer: Tan Sheet Flooring			**ND**				
Layer: Beige Fibrous Backing			**ND**				
Layer: Yellow Mastic			**ND**				
Total Composite Values of Fibrous Components:		**Asbestos (ND)**					
Cellulose (Trace)							
Comment: Bulk complex sample.							
E07-897-7-24-3B	10663942						
Layer: Grey Tile			**ND**				
Layer: Black Mastic			**ND**				
Layer: Tan Sheet Flooring			**ND**				
Layer: Beige Fibrous Backing			**ND**				
Layer: Yellow Mastic			**ND**				
Total Composite Values of Fibrous Components:		**Asbestos (ND)**					
Cellulose (Trace)							
Comment: Bulk complex sample.							
E07-897-7-24-4B	10663943						
Layer: Off-White Plaster			**ND**				
Layer: White Plaster			**ND**				
Layer: Paint			**ND**				
Total Composite Values of Fibrous Components:		**Asbestos (ND)**					
Cellulose (Trace)							

3777 Depot Road, Suite 409, Hayward, CA 94545 / Telephone: (510) 887-8828 (800) 827-FASI / Fax: (510) 887-4218

Client Name: Benchmark Environmental

Report Number: B102012
Date Printed: 07/26/07

Sample ID	Lab Number	Asbestos Type	Percent in Layer	Asbestos Type	Percent in Layer	Asbestos Type	Percent in Layer
E07-897-7-24-5B	10663944						
Layer: White Drywall			**ND**				
Layer: Off-White Skimcoat/Joint Compound			**ND**				
Layer: Paint			**ND**				
Total Composite Values of Fibrous Components:		**Asbestos (ND)**					
Cellulose (20 %) Fibrous Glass (10 %)							
E07-897-7-24-6B	10663945						
Layer: White Drywall			**ND**				
Layer: Off-White Skimcoat/Joint Compound			**ND**				
Layer: Paint			**ND**				
Total Composite Values of Fibrous Components:		**Asbestos (ND)**					
Cellulose (20 %) Fibrous Glass (10 %)							
E07-897-7-24-7B	10663946						
Layer: White Drywall			**ND**				
Layer: Grey Skimcoat/Joint Compound			**ND**				
Layer: Paint			**ND**				
Total Composite Values of Fibrous Components:		**Asbestos (ND)**					
Cellulose (20 %) Fibrous Glass (10 %)							
E07-897-7-24-8B	10663947						
Layer: White Drywall			**ND**				
Layer: Off-White Skimcoat/Joint Compound			**ND**				
Layer: Paint			**ND**				
Total Composite Values of Fibrous Components:		**Asbestos (ND)**					
Cellulose (20 %) Fibrous Glass (10 %)							
E07-897-7-24-9B	10663948						
Layer: Off-White Non-Fibrous Material			**ND**				
Layer: Paint			**ND**				
Total Composite Values of Fibrous Components:		**Asbestos (ND)**					
Cellulose (Trace)							
E07-897-7-24-10B	10663949						
Layer: Off-White Non-Fibrous Material			**ND**				
Layer: Paint			**ND**				
Total Composite Values of Fibrous Components:		**Asbestos (ND)**					
Cellulose (Trace)							

James Flores, Laboratory Supervisor, Hayward Laboratory

Note: Limit of Quantification ('LOQ') = 1%. 'Trace' denotes the presence of asbestos below the LOQ. 'ND' = 'None Detected'.

Analytical results and reports are generated by Forensic Analytical at the request of and for the exclusive use of the person or entity (client) named on such report. Results, reports or copies of same will not be released by Forensic Analytical to any third party without prior written request from client. This report applies only to the sample(s) tested. Supporting laboratory documentation is available upon request. This report must not be reproduced except in full, unless approved by Forensic Analytical. The client is solely responsible for the use and interpretation of test results and reports requested from Forensic Analytical. This report must not be used by the client to claim product endorsement by NVLAP or any other agency of the U.S. Government. Forensic Analytical is not able to assess the degree of hazard resulting from materials analyzed. Forensic Analytical reserves the right to dispose of all samples after a period of thirty (30) days, according to all state and federal guidelines, unless otherwise specified. All samples were received in acceptable condition unless otherwise noted.

3777 Depot Road, Suite 409, Hayward, CA 94545 / Telephone: (510) 887-8828 (800) 827-FASI / Fax: (510) 887-4218

BENCHMARK

3732 Charter Park Drive, Ste. A San Jose CA 95136
408-448-7594 408-448-3849 (fax)

BULK CHAIN OF CUSTODY

Please Include Sample Locations On Laboratory Report

Page: 1 of 2

Project #: E07-897-ASC Date: 7/24/07 Technician: RSB

Project Address: 2175 Lincoln Avenue, SAN JOSE

Client Name: _____ Company: _____

Sample Number	Location	Homogenous Group or Measurement	Material or Component	Results To Be Reported As
E07-897-7-24-1B	Kitchen pass thru @ wall #3 - cove base - Beige	(1)	cove base / mastic	
2B	R.S.T. at kitchen pass thru @ wall #3 - tan	↓	12"x12" R.S.T. (tiles)	
3B	R.S.T at kitchen entry (Lincoln et. entry)	↓	↓	
4B	ceiling at kitchen pass-thru	(2)	wall system	
5B	wall #2 kitchen pass thru	↓	↓	
6B	Wall #3 kitchen (Double wall)	↓	wallboard / Joint compound	
7B	wall #2 kitchen - Rt side	↓	↓	
8B	wall #2 kitchen - left side	↓	↓	
9B	Exterior window glaze at lincoln et entry	(3)	window glaze	

Circle Project Type
Asbestos (Survey/Sample Collection)
Lead-Based Paint
Risk Assessment (Lead)
Mold/Fungus (Baseline)
Sewage Screen (Baseline)
Sewage Screen (Post-Remediation)
Other: _____

Circle Type of Analysis
PLM/Bulk (EPA 600)
EPA SW 846-7420 FLAA
Dust Wipe, Soil, Paint Chip
GFAA Water (lead)
Qualitative (MUG) E.Coli/Coliforms (Soil/Swab)
Direct Microscopic Exam (Tape/Swab)
Other: _____

Circle Turnaround Time
Same Day/Rush
24 Hour
48 Hour
72 Hour
5 Day
Other: _____

Relinquished By: [signature] Received By: [signature] 10:30 Date/Time: RECEIVED JUL 25 2007

BENCHMARK

3732 Charter Park Drive, Ste. A San Jose CA 95136
408-448-7594 408-448-3849 (fax)

BULK CHAIN OF CUSTODY

Please Include Sample Locations On Laboratory Report

Page: 2 of 2

Project #: E07-897-ASC Date: 7/24/07 Technician: RDB

Project Address: 2175 lincoln Avenue, SAN JOSE

Client Name: _____ Company: _____

Sample Number	*Location*	*Homogenous Group or Measurement*	*Material or Component*	*Results To Be Reported As*
E07-897-7-24-10B	window glaze Lincoln ct entrance	(3)	window glaze	

Circle
Project Type
Asbestos (Survey/Sample Collection)
Lead-Based Paint
Risk Assessment (Lead)
Mold/Fungus (Baseline)
Sewage Screen (Baseline)
Sewage Screen (Post-Remediation)
Other: _____

Circle
Type of Analysis
PLM/Bulk (EPA 600)
EPA SW 846-7420 FLAA
Dust Wipe, Soil, Paint Chip
GFAA Water (lead)
Qualitative (MUG) E.Coli/Coliforms (Soil/Swab)
Direct Microscopic Exam (Tape/Swab)
Other: _____

Circle
Turnaround Time
Same Day/Rush
24 Hour
48 Hour
72 Hour
5 Day
Other: _____

Relinquished By: RDB [signature] Received By: [signature] OPS 10:30 Date/Time: RECEIVED JUL 25 2007

BENCHMARK
ENVIRONMENTAL ENGINEERING
A DIVISION OF UPIN INC.

CORPORATE OFFICE 3732 Charter Park Drive • Suite A • San Jose CA 95136
408.448.7594 PHONE • 800.988.7424 TOLL FREE • 408.448.3849 FAX
www.benchmarkenvironmental.com

Post-it® Fax Note 7671	Date 8/13/07	# of pages ▶ 6
To Behilma Magday	From Benchmark	
Co./Dept. City of San Jose	Co. General Services	
Phone #	Phone # 408 448-7594	
Fax # 971-4690	Fax #	

August 13, 2007

Behilma Magday
City of San Jose - General Services
1661 Senter Road
San Jose, CA 95136

Re: Asbestos Sample Collection
Willow Glen Senior Center, 2175 Lincoln Avenue, San Jose
Benchmark Project #E07-897A-ASC

ASBESTOS-NONE DETECTED

Dear Ms. Magday:

Benchmark conducted a previous survey within the building on or about July 24, 2007. The City of San Jose requested a follow-up inspection be conducted in order to sample materials that were previously inaccessible.

Benchmark inspected materials in general accordance with the Environmental Protection Agency (EPA) National Emission Standards for Hazardous Air Pollutants (NESHAP) building demolition requirements.

Benchmark was contracted to conduct sampling of suspect asbestos containing materials in pre-designated areas only. The materials sampled will not provide inclusive information as to the presence of asbestos on the property site and is strictly limited to the materials sampled and analyzed.

Twelve (12) samples of suspect asbestos containing materials were collected on the property site and submitted for analysis. The following table provides information on the materials sampled.

Material	Location	% Asbestos
Ceiling Tile	Multi-use Room	None Detected
Paper under Ceiling Tile	Multi-use Room	None Detected
Insp. Paper	Multi-use Room	None Detected
Plaster	Foyer and kitchen	None Detected
Blow In Insulation	Attic	None Detected

Findings:

Laboratory results (see attached) indicated that the samples submitted of above listed materials did not contain asbestos. A material is considered by the EPA to be asbestos-containing if at least one sample collected from the area shows asbestos present in an amount greater than one percent (> 1%).

The laboratory that conducted the analysis was Forensic Analytical located in Hayward, California. The analytical results and chain of custody are attached.

We appreciate this opportunity to provide professional services for this project. If we can be of further assistance, or if you have any questions concerning this report, please do not hesitate to contact our office at (408) 448-7594.

Sincerely,
Benchmark Environmental Engineering

Terri MacFarlane, CAC #90-2747
Environmental Field Service Manager

Enclosure

Forensic Analytical

Final Report

Bulk Asbestos Analysis

(EPA Method 600/R-93-116, Visual Area Estimation)

Benchmark Environmental
Project Manager

3732-A Charter Park Drive
San Jose, CA 95136

Client ID: 3565
Report Number: B102583
Date Received: 08/08/07
Date Analyzed: 08/09/07
Date Printed: 08/09/07
First Reported: 08/09/07

Job ID/Site: E07-897-ASC - 2175 Lincoln Ave., S.J., CA 9512

Date(s) Collected:

FASI Job ID: 3565
Total Samples Submitted: 12
Total Samples Analyzed: 12

Sample ID	Lab Number	Asbestos Type	Percent in Layer	Asbestos Type	Percent in Layer	Asbestos Type	Percent in Layer
897-01B	10669163						
Layer: Tan Fibrous Material			ND				
Layer: Paint			ND				
Total Composite Values of Fibrous Components: Cellulose (95 %)		Asbestos (ND)					
897-02B	10669164						
Layer: Tan Fibrous Material			ND				
Total Composite Values of Fibrous Components: Cellulose (99 %)		Asbestos (ND)					
897-03B	10669165						
Layer: Tan Fibrous Material			ND				
Total Composite Values of Fibrous Components: Cellulose (99 %)		Asbestos (ND)					
897-04B	10669166						
Layer: Tan Fibrous Material			ND				
Layer: Paint			ND				
Total Composite Values of Fibrous Components: Cellulose (95 %)		Asbestos (ND)					
897-05B	10669167						
Layer: Tan Fibrous Material			ND				
Layer: Paint			ND				
Total Composite Values of Fibrous Components: Cellulose (95 %)		Asbestos (ND)					
897-06B	10669168						
Layer: White Plaster			ND				
Layer: Paint			ND				
Total Composite Values of Fibrous Components: Cellulose (Trace)		Asbestos (ND)					
897-07B	10669169						
Layer: White Plaster			ND				
Layer: Paint			ND				
Total Composite Values of Fibrous Components: Cellulose (Trace)		Asbestos (ND)					

Forensic Analytical

Client Name: Benchmark Environmental

Report Number: B102583
Date Printed: 08/09/07

Sample ID	Lab Number	Asbestos Type	Percent in Layer	Asbestos Type	Percent in Layer	Asbestos Type	Percent in Layer
897-08B	10669170						
Layer: White Plaster			ND				
Layer: Paint			ND				
Total Composite Values of Fibrous Components: Cellulose (Trace)		Asbestos (ND)					
897-09B	10669171						
Layer: Dark Grey Fibrous Material			ND				
Total Composite Values of Fibrous Components: Fibrous Glass (99 %)		Asbestos (ND)					
897-10B	10669172						
Layer: White Plaster			ND				
Layer: White Non-Fibrous Material			ND				
Layer: Paint			ND				
Total Composite Values of Fibrous Components: Cellulose (Trace)		Asbestos (ND)					
897-11B	10669173						
Layer: White Plaster			ND				
Layer: White Non-Fibrous Material			ND				
Layer: Paint			ND				
Total Composite Values of Fibrous Components: Cellulose (Trace)		Asbestos (ND)					
897-12B	10669174						
Layer: White Plaster			ND				
Layer: White Non-Fibrous Material			ND				
Layer: Paint			ND				
Total Composite Values of Fibrous Components: Cellulose (Trace)		Asbestos (ND)					

James Flores, Laboratory Supervisor, Hayward Laboratory

Note: Limit of Quantification ('LOQ') = 1%. 'Trace' denotes the presence of asbestos below the LOQ. 'ND' = 'None Detected'.

Analytical results and reports are generated by Forensic Analytical at the request of and for the exclusive use of the person or entity (client) named on such report. Results, reports or copies of same will not be released by Forensic Analytical to any third party without prior written request from client. This report applies only to the sample(s) tested. Supporting laboratory documentation is available upon request. This report must not be reproduced except in full, unless approved by Forensic Analytical. The client is solely responsible for the use and interpretation of test results and reports requested from Forensic Analytical. This report must not be used by the client to claim product endorsement by NVLAP or any other agency of the U.S. Government. Forensic Analytical is not able to assess the degree of hazard resulting from materials analyzed. Forensic Analytical reserves the right to dispose of all samples after a period of thirty (30) days, according to all state and federal guidelines, unless otherwise specified. All samples were received in acceptable condition unless otherwise noted.

3777 Depot Road, Suite 409, Hayward, California 94545-2761 • Telephone: 510/887-8828 800/827-FAS1 Fax: 510/887-4218

BENCHMARK
3732 Charter Park Drive, Ste. A
408-448-7594 408-448-3849 (fax)

BULK CHAIN OF CUSTODY

Page: 1 of 2

Project #: E07-897-ASC Date: 08-8-07 Technician: R. Borzin

Project Address: 2175 Lincoln Ave, S J, CA 95125

Client Name: City of San Jose, Gen. services Company:

Sample Number	Location	Homogenous Group or Measurement	Material or Component	Results To Be Reported As
897-01B	M.P. Room, ceiling, N.E. Corner		1'x1' ceiling tile	
897-02B	↓, ↓, ↓		Paper under 1'x1' CT	
897-03B	↓, ↓, ↓		Ins. paper	
897-04B	↓, ↓, S.E. Corner		1'x1' ceiling tile	
897-05B	↓, ↓, above kitchen entry door		1'x1' ceiling tile	
897-06B	Foyer, center ceiling ~~plaster~~		Plaster	
897-07B	↓, S.E. Corner		↓	
897-08B	↓, N.E. Corner		↓	
897-09B	↓, AHIC ~~[illegible]~~		Blow-in Insulation	

Circle
Project Type
Asbestos (Survey/Sample Collection)
Lead-Based Paint
Risk Assessment (Lead)
Mold/Fungus (Baseline)
Sewage Screen (Baseline)
Sewage Screen (Post-Remediation)
Other:

Circle
Type of Analysis
PLM/Bulk (EPA 600)
EPA SW 846-7420 FLAA
Dust Wipe, Soil, Paint Chip
GFAA Water (lead)
Qualitative (MUG) E.Coli/Coliforms (Soil/Swab)
Direct Microscopic Exam (Tape/Swab)
Other:

Circle
Turnaround Time
Same Day/Rush
24 Hour
48 Hour
72 Hour
5 Day
Other:

Relinquished By: [signature] Received By: 08-08-07 Date/Time: 7:50

BENCHMARK
3732 Charter Park Drive, Ste. A
408-448-7594 408-448-3849 (fax)

BULK CHAIN OF CUSTODY

Page: 2 of 2

Project #: E07-897ASC Date: 08-08-07 Technician: P. Barzin

Project Address: 2175 Lincoln Ave, SJ, CA 95125

Client Name: City of SJ, General Services Company:

Sample Number	Location	Homogenous Group or Measurement	Material or Component	Results To Be Reported As
897-10B	Kitchen, above sink, ceiling		Plaster	
897-11B	Restroom,			
897-12B	above Refrigerator			

Circle
Project Type
Asbestos (Survey/Sample Collection)
Lead-Based Paint
Risk Assessment (Lead)
Mold/Fungus (Baseline)
Sewage Screen (Baseline)
Sewage Screen (Post-Remediation)
Other: _____

Circle
Type of Analysis
PLM/Bulk (EPA 600)
EPA SW 846-7420 FLAA
Dust Wipe, Soil, Paint Chip
GFAA Water (lead)
Qualitative (MUG) E.Coli/Coliforms (Soil/Swab)
Direct Microscopic Exam (Tape/Swab)
Other: _____

Circle
Turnaround Time
Same Day/Rush
24 Hour
48 Hour
72 Hour
5 Day
Other: _____

Relinquished By: _____ Received By: _____ Date/Time: 5:30p